BLIZZARD®
SNOWPLOWS

2005 to 1997

MODEL YEAR VEHICLES

UNDERCARRIAGE SELECTION GUIDE

Lit. No. 29321
August 20, 2006
Revision 01

This document supersedes all editions with an earlier date.

TABLE OF CONTENTS

About the *U/C Selection Guide* 3
How to Use the *U/C Selection Guide* 4
Chevy/GMC Undercarriage Kits 5
Dodge Undercarriage Kits 17
Ford Undercarriage Kits 28
Freightliner Undercarriage Kits 50
Jeep Undercarriage Kits 51
Mazda Undercarriage Kits 52
Nissan Undercarriage Kits 53
Toyota Undercarriage Kits 54
Headlamp Reference Guide 56
Weight and Dimensional Charts 57
Dimensional Diagram 58
Ballast Inquiry Sheet 59
Utility Vehicle U/C Kits 60

ABBREVIATION KEY			
---	No Application	HO	High Output
4WS	Four Wheel Steering	HYD	Hydraulic
4x2	Two Wheel Drive	LP	Low Profile POWER PLOW™ Snowplow
4x4	Four Wheel Drive	LT	Light Truck Snowplow
A,Q&L	A-Frame, Quadrant & Lift Frame	MIN	Minimum
AWD	All Wheel Drive	NTEA	National Truck Equipment Association
CG	Center of Gravity	OEM	Original Equipment Manufacturer
Chassis	Chassis Cab or Cab Chassis	OHC	Overhead Cam
DIA	Diameter	PN	Part Number
DRW	Dual Rear Wheels	PP	POWER PLOW Snowplow
Ext Cab	Extended Cab Vehicle	RGAWR	Rear Gross Axle Weight Rating
FFV	Flex Fuel Vehicle	SU-2DR	Two Door Sport/Utility Vehicle
FGAWR	Front Gross Axle Weight Rating	SU-4DR	Four Door Sport/Utility Vehicle
FMVSS	Federal Motor Vehicle Safety Standards	SW	SPEEDWING™ Snowplow
GVWR	Gross Vehicle Weight Rating	w/	With
HD	Heavy Duty	w/o	Without

⚠ WARNING

New untitled vehicle installation of a snowplow requires National Highway Traffic Safety Administration altered vehicle certification labeling. Installer to verify that selected snowplow and ballast, if required, do not exceed GVWR or GAWR rating label and complies with FMVSS.

⚠ WARNING

Do not exceed GVWR or GAWR, including blade and ballast. The rating label is found on the driver-side vehicle door cornerpost.

ABOUT THE *U/C SELECTION GUIDE*

The *Undercarriage (U/C) Selection Guide* (*USG*) is designed to help you determine the appropriate snowplow components for a particular snowplow vehicle application. The information published in this guide is based on Federal Motor Vehicle Safety Standards (FMVSS) and a "representative" snowplow vehicle as defined in this guide. The vehicle includes a combined weight of 300 lb for occupants in the front seat location.

This *USG* is for specific model year vehicles only and is listed on the front cover of this guide. This guide should be saved for future reference. New selection guides will be published for the upcoming model year and so on. The instructions on page 4 explain how to use the *U/C Selection Guide.*

The "Representative Vehicle"

Knowing that today's snowplow vehicles come in a variety of sizes and configurations (such as wheel base, engine size, and handling packages), Blizzard has defined a "representative vehicle" that contains the options most likely to appear on a typical snowplow application. The "representative vehicle" includes the following options:

- 4X4 Drivetrain (unless noted)
- Spare Tire & Wheel
- Automatic Transmission
- Rear Bumper
- Air Conditioning
- Full Fluids

NOTE: If the vehicle in question does not match a vehicle listing in the *U/C Selection Guide,* or has options that differ from the "Representative Vehicle" as defined earlier, the ballast inquiry sheet must be filled out and submitted in order to determine plow availability and correct ballast amounts to maintain FMVSS compliance. Completed vehicle at no time shall exceed GVWR or GAWR.

Snowplow Product

Snowplows are considered motor vehicle equipment. The installer is ultimately responsible for determining and correctly labeling the vehicle with the addition of snowplow selection. No product selected and installed shall render inoperative the vehicle's safety compliance.

Product Changes

All information is as accurate as we can determine but is subject to revision with additional or more complete information. Blizzard reserves the right under its product improvement policy to change construction or design details and furnish equipment when so altered without reference to illustrations or specifications used. Blizzard or the vehicle manufacturer may require or recommend optional equipment for snow removal.

Ballast

When ballast is required it must be secured behind the rear wheels in a manner which prevents it from sliding during normal driving. Ballast shall not exceed 1000 lb.

Blizzard offers an optional ballast retainer kit (PN 62849) for this purpose.

HOW TO USE THE *U/C SELECTION GUIDE*

Selection Example:

Acme Motors 25000HD RS with POWER HITCH™ System

1. Go to the section for the appropriate manufacturer.

2. Starting at the left-most column, find the **model, year** and appropriate configuration for the vehicle. In this case, 4X4, Regular Cab, 8.0 ft. box, 6.0L V8 engine, 4800 Min. FGAWR.

3. Locate the **headlight conversion harness** part number for this vehicle: 62224. See Headlamp Reference Guide in the back of the Undercarriage Selection Guide for more information.

NOTE: Not all applications require a conversion harness. If no harness is needed, the part number listed will be "n/a".

4. Locate the **undercarriage** for this vehicle: B30042. Refer to any footnotes concerning conditions or requirements. For this example there are three footnotes: 1, 6 and 45.

5. Locate the acceptable **blades** at the top of the table. Only those blades with ballast weights listed are valid applications. Three short dashes (—) indicates an invalid application. A question mark (?) indicates a ballast inquiry sheet must be completed.

6. For this example, there are five acceptable blades. Choose the 810PP. This blade requires 600 lb of ballast.

7. To order a complete snowplow package, read down from the top of the selected blade column for appropriate part numbers. Be sure to select *one* control, either joystick or touchpad. For this example, the part numbers would be:

   - B0810 (blade assembly)
   - B62109 *or* B62141 (control)
   - B62224 (headlight conversion harness, from Step 3 – *if not n/a*)
   - B30042 (undercarriage kit, from Step 4)

2005 to 1997 Acme Motors

1

													POWER HITCH										
													LT			HD			SPEEDWING™		POWER PLOW™		
													680LT	720LT	760LT[45]	760HD	800HD	860HD	760SW	860SW	810PP[45]	8611LP	8611PP
												Blade Width	6'-8"	7'-2"	7'-6"	7'-6"	8'-0"	8'-6"	7'-6"	8'-6"	8'-0" 10'-0"	8'-6" 11'-0"	8'-6" 11'-0"
												Blade Assembly	B0680	B0720	B0761	B0760	B0800	B0860	B0765	B0865	B0810	B0863	B0861
												Joystick Control	B62073								B62109		
												Touch Pad Control	B62142								B62141		
Model		Year	Body Style	DRW	Box Option	Engine Type	Min FGAWR	Min RGAWR	Min GVWR	Headlight Conversion Harness	POWER HITCH™ System: Under-carriage	POWER HITCH™ System: Notes	Ballast Guidelines, lbs (1)										
25000HD RS	4x4	2005	Reg Cab	No	8.0 Box	6.0L V8	4800	6084	9200	HB3/HB4 use B62224	B30042	6	---	---	---	350	350	350	---	450	600	---	---
25000HD TU	4x4	2005	Reg Cab	No	8.0 Box	6.0L V8	4500	6084	9200		B30042	6	---	---	---	350	400	450	---	800	---	---	---
25000HD VX	4x4	2005	Reg Cab	No	8.0 Box	8.1L V8	4800	6084	9200		B30042	6	---	---	---	600	700	750	---	---	---	---	---

2 3 4 5 6 7

Notes:

1. Ballast amounts are based on a "Representative Vehicle," defined in the vehicle selection guide instructions, and must be modified for all other configurations for axle and GVWR compliance.
6. All New Style Only (2nd # in model # is 5 not 0) example: K15903. Refer to label in glove box for model number.
45. Ballast amounts for Model 760LT and 810PP are calculated on reduced plow weights produced after March 2006 (Serial Number 0603 or later). See the weight and dimensional charts at the end of this guide for reduced, current and old plow weights.

2005 to 1997 Chevy/GMC

													POWER HITCH										
													LT			HD			SPEEDWING™		POWER PLOW™		
													680LT	720LT	760LT[45]	760 HD	800 HD	860 HD	760SW	860SW	810PP[45]	8611LP	8611PP
												Blade Width	6'-8"	7'-2"	7'-6"	7'-6"	8'-0"	8'-6"	7'-6"	8'-6"	8'-0" 10'-0"	8'-6" 11'-0"	8'-6" 11'-0"
												Blade Assembly	B0680	B0720	B0761	B0760	B0800	B0860	B0765	B0865	B0810	B0863	B0861
												Joystick Control	B62073								B62109		
												Touchpad Control	B62142								B62141		
Model		Year	Body Style	DRW	Box Option	Engine Type	Min FGAWR	Min RGAWR	Min GVWR	Headlight Conversion Harness	POWER HITCH™ System Under-carriage	POWER HITCH™ System Notes	Ballast Guidelines, lbs (1)										
AVALANCHE 1500	4x4	2005	SU-4DR	No	---	5.3L V8	3800	4000	7000	HB3/HB4 use B62224	B30087	3,6	---	---	600	---	---	---	---	---	---	---	---
COLORADO/CANYON Z71	4x4	2005	Reg Cab	No	6.1 Box	2.8L I4	2753	2896	5150	HB3/HB4 US use B62224 or HB3/HB4 Canada use B62224	B30186	-	300	350	---	---	---	---	---	---	---	---	---
COLORADO/CANYON Z71	4x4	2005	Reg Cab	No	6.1 Box	3.5L I5	2753	2896	5150		B30186	-	550	650	---	---	---	---	---	---	---	---	---
COLORADO/CANYON Z71	4x4	2005	Ext Cab	No	6.1 Box	2.8L I4	2753	2896	5300		B30186	-	750	850	---	---	---	---	---	---	---	---	---
COLORADO/CANYON Z85	4x4	2005	Reg Cab	No	6.1 Box	2.8L I4	2753	2896	5150		B30186	-	300	350	---	---	---	---	---	---	---	---	---
COLORADO/CANYON Z85	4x4	2005	Reg Cab	No	6.1 Box	3.5L I5	2753	2896	5150		B30186	-	550	650	---	---	---	---	---	---	---	---	---
COLORADO/CANYON Z85	4x4	2005	Ext Cab	No	6.1 Box	2.8L I4	2753	2896	5300		B30186	-	750	850	---	---	---	---	---	---	---	---	---
K1500 SILV/SIERRA	4x4	2005	Reg Cab	No	6.5 Box	4.3L V6	3925	3750	6400	HB3/HB4 use B62223	B30087	3,6	---	---	400	---	---	---	500	---	---	---	---
K1500 SILV/SIERRA	4x4	2005	Reg Cab	No	6.5 Box	4.8L V8	3925	3750	6400		B30087	3,6	---	---	400	---	---	---	550	---	---	---	---
K1500 SILV/SIERRA	4x4	2005	Reg Cab	No	6.5 Box	5.3L V8	3925	3750	6400		B30087	3,6	---	---	400	---	---	---	600	---	---	---	---
K1500 SILV/SIERRA	4x4	2005	Reg Cab	No	8.0 Box	4.3L V6	3925	3750	6400		B30087	3,6	---	---	350	---	---	---	500	---	---	---	---
K1500 SILV/SIERRA	4x4	2005	Reg Cab	No	8.0 Box	4.8L V8	3925	3750	6400		B30087	3,6	---	---	400	---	---	---	---	---	---	---	---
K1500 SILV/SIERRA	4x4	2005	Reg Cab	No	8.0 Box	5.3L V8	3925	3750	6400		B30087	3,6	---	---	400	---	---	---	---	---	---	---	---
K1500 SILV/SIERRA	4x4	2005	Ext Cab	No	6.5 Box	5.3L V8 HO	3925	3750	6400		B30087	3,6	---	---	350	---	---	---	---	---	---	---	---
K2500HD SILV/SIERRA	4x4	2005	Reg Cab	No	8.0 Box	6.0L V8	4800	6084	9200		B30042	6	---	---	---	300	350	350	---	400	550	---	---
K2500HD SILV/SIERRA	4x4	2005	Reg Cab	No	8.0 Box	6.0L V8	4500	6084	9200		B30042	6	---	---	---	300	350	350	---	650	---	---	---
K2500HD SILV/SIERRA	4x4	2005	Reg Cab	No	8.0 Box	8.1L V8	4800	6084	9200		B30042	6	---	---	---	450	550	600	---	950	---	---	---
K2500HD SILV/SIERRA	4x4	2005	Ext Cab	No	6.5 Box	6.0L V8	4800	6084	9200		B30042	6	---	---	---	450	450	500	---	550	1000	---	---
K2500HD SILV/SIERRA	4x4	2005	Ext Cab	No	6.5 Box	6.0L V8	4670	6084	9200		B30042	6	---	---	---	450	450	500	---	600	---	---	---
K2500HD SILV/SIERRA	4x4	2005	Ext Cab	No	8.0 Box	6.0L V8	4800	6084	9200		B30042	6	---	---	---	400	400	400	---	450	---	---	---
K2500HD SILV/SIERRA	4x4	2005	Crew Cab	No	6.5 Box	6.0L V8	4800	6084	9200		B30042	6	---	---	---	500	500	500	---	750	---	---	---
K2500HD SILV/SIERRA	4x4	2005	Crew Cab	No	8.0 Box	6.0L V8	4800	6084	9200		B30042	6	---	---	---	300	350	350	---	650	---	---	---
K2500HD SILV/SIERRA	4x4	2005	All	No	Chassis	All	All	All	8501		B30042	6	---	---	---	?	?	?	---	?	?	?	---
K3500 SILV/SIERRA	4x4	2005	Reg Cab	No	8.0 Box	6.0L V8	4800	6500	9900		B30042	6	---	---	---	250	250	300	---	350	500	---	---
K3500 SILV/SIERRA	4x4	2005	Reg Cab	No	8.0 Box	6.6L D	4800	6500	9900		B30042	6	---	---	---	1000	---	---	---	---	---	---	---
K3500 SILV/SIERRA	4x4	2005	Reg Cab	No	8.0 Box	8.1L V8	4800	6500	9900		B30042	6	---	---	---	450	500	550	---	950	---	---	---
K3500 SILV/SIERRA	4x4	2005	Reg Cab	Yes	8.0 Box	6.0L V8	4800	8550	11400		B30042	6	---	---	---	---	---	200	---	250	600	---	---
K3500 SILV/SIERRA	4x4	2005	Reg Cab	Yes	8.0 Box	8.1L V8	4800	8550	11400		B30042	6	---	---	---	---	---	750	---	---	---	---	---
K3500 SILV/SIERRA	4x4	2005	Ext Cab	No	8.0 Box	6.0L V8	4800	6500	9900		B30042	6	---	---	---	150	150	150	---	350	---	---	---
K3500 SILV/SIERRA	4x4	2005	Ext Cab	Yes	8.0 Box	6.0L V8	4800	6500	9900		B30042	6	---	---	---	---	---	100	---	300	---	---	---
K3500 SILV/SIERRA	4x4	2005	Crew Cab	No	8.0 Box	6.0L V8	4800	6500	9900		B30042	6	---	---	---	150	150	150	---	200	---	---	---

Notes:

1. Ballast amounts are based on a "Representative Vehicle," defined in the vehicle selection guide instructions, and must be modified for all other configurations for axle and GVWR compliance.
3. Requires bumper notching.
6. All New Style Only (2nd # in model # is 5 not 0) example: K15903. Refer to label in glove box for model number.
45. Ballast amounts for Model 760LT and 810PP are calculated on reduced plow weights produced after March 2006 (Serial Number 0603 or later). See the weight and dimensional charts at the end of this guide for reduced, current and old plow weights.

2005 to 1997 Chevy/GMC

													LT			HD			SPEEDWING™		POWER PLOW™		
													680LT	720LT	760LT[45]	760 HD	800 HD	860 HD	760SW	860SW	810PP[45]	8611LP	8611PP
												Blade Width	6'-8"	7'-2"	7'-6"	7'-6"	8'-0"	8'-6"	7'-6"	8'-6"	8'-0" 10'-0"	8'-6" 11'-0"	8'-6" 11'-0"
												Blade Assembly	B0680	B0720	B0761	B0760	B0800	B0860	B0765	B0865	B0810	B0863	B0861
												Joystick Control	B62073								B62109		
												Touchpad Control	B62142								B62141		
Model		Year	Body Style	DRW	Box Option	Engine Type	Min FGAWR	Min RGAWR	Min GVWR	Headlight Conversion Harness	POWER HITCH™ System Under-carriage	POWER HITCH™ System Notes	Ballast Guidelines, lbs (1)										
K3500 SILV/SIERRA	4x4	2005	Crew Cab	Yes	8.0 Box	6.0L V8	4800	8550	11400	HB3/HB4 use B62223	B30042	6	---	---	---	---	---	450	---	850	---	---	---
K3500 SILV/SIERRA	4x4	2005	All	No	Chassis	All	All	All	8501		B30042	6	---	---	---	?	?	?	---	?	?	?	---
K3500 SILV/SIERRA	4x4	2005	All	Yes	Chassis	All	All	All	8501		B30042	6	---	---	---	---	---	?	---	?	?	?	---
C4500	4x4	2005	All	Yes	Chassis	All	All	All	10001	2B use B62220 or 1A/2A use B62227	B30191	-	---	---	---	---	---	?	---	?	?	?	?
C4500	4x2	2005	All	Yes	Chassis	All	All	All	10001		B30172	-	---	---	---	---	---	?	---	?	?	?	?
C5500	4x4	2005	All	Yes	Chassis	All	All	All	10001		B30191	-	---	---	---	---	---	?	---	?	?	?	?
C5500	4x2	2005	All	Yes	Chassis	All	All	All	10001		B30172	-	---	---	---	---	---	?	---	?	?	?	?
TAHOE/YUKON 1500	4x4	2004	SU-4DR	No	---	4.8L V8	4180	6000	6900	HB3/HB4 use B62224	B30087	3,6	---	---	50	---	---	---	150	---	---	---	---
TAHOE/YUKON 1500	4x4	2004	SU-4DR	No	---	4.8L V8	4180	6000	6800		B30087	3,6	---	---	50	---	---	---	150	---	---	---	---
TAHOE/YUKON 1500	4x4	2004	SU-4DR	No	---	4.8L V8	3800	4000	6900		B30087	3,6	---	---	150	---	---	---	---	---	---	---	---
TAHOE/YUKON 1500	4x4	2004	SU-4DR	No	---	5.3L V8	4180	6000	6900		B30087	3,6	---	---	0	---	---	---	150	---	---	---	---
TAHOE/YUKON 1500	4x4	2004	SU-4DR	No	---	5.3L V8	4180	6000	6800		B30087	3,6	---	---	0	---	---	---	150	---	---	---	---
TAHOE/YUKON 1500	4x4	2004	SU-4DR	No	---	5.3L V8	3800	4000	6900		B30087	3,6	---	---	200	---	---	---	---	---	---	---	---
SUBURBAN/YUKON XL 2500 w/4WS	4x4	2004	SU-4DR	No	---	6.0L V8	4500	5360	8600		B30042	6	---	---	---	0	100	150	---	---	---	---	---
SUBURBAN/YUKON XL 2500	4x4	2004	SU-4DR	No	---	6.0L V8	4500	5360	8600		B30042	6	---	---	---	50	100	150	---	---	---	---	---
COLORADO/CANYON Z71	4x4	2004	Reg Cab	No	6.1 Box	2.8L I4	2800	2700	5150	HB3/HB4 US use B62224 or HB3/HB4 Canada use B62224	B30186	-	200	250	---	---	---	---	---	---	---	---	---
COLORADO/CANYON Z71	4x4	2004	Reg Cab	No	6.1 Box	2.8L I4	2753	2896	5150		B30186	-	300	400	---	---	---	---	---	---	---	---	---
COLORADO/CANYON Z71	4x4	2004	Reg Cab	No	6.1 Box	3.5L I5	2800	2700	5150		B30186	-	300	350	---	---	---	---	---	---	---	---	---
COLORADO/CANYON Z71	4x4	2004	Reg Cab	No	6.1 Box	3.5L I5	2753	2896	5150		B30186	-	450	550	---	---	---	---	---	---	---	---	---
COLORADO/CANYON Z71	4x4	2004	Ext Cab	No	6.1 Box	2.8L I4	2753	2896	5300		B30186	-	800	850	---	---	---	---	---	---	---	---	---
COLORADO/CANYON Z85	4x4	2004	Reg Cab	No	6.1 Box	2.8L I4	2800	2700	5150		B30186	-	200	200	---	---	---	---	---	---	---	---	---
COLORADO/CANYON Z85	4x4	2004	Reg Cab	No	6.1 Box	2.8L I4	2753	2896	5150		B30186	-	300	350	---	---	---	---	---	---	---	---	---
COLORADO/CANYON Z85	4x4	2004	Reg Cab	No	6.1 Box	3.5L I5	2800	2700	5150		B30186	-	300	350	---	---	---	---	---	---	---	---	---
COLORADO/CANYON Z85	4x4	2004	Reg Cab	No	6.1 Box	3.5L I5	2753	2896	5150		B30186	-	450	500	---	---	---	---	---	---	---	---	---
COLORADO/CANYON Z85	4x4	2004	Ext Cab	No	6.1 Box	2.8L I4	2753	2896	5300		B30186	-	750	---	---	---	---	---	---	---	---	---	---
K1500 SILV/SIERRA	4x4	2004	Reg Cab	No	6.5 Box	4.3L V6	3925	3750	6400	HB3/HB4 use B62223	B30087	3,6	---	---	450	---	---	---	550	---	---	---	---
K1500 SILV/SIERRA	4x4	2004	Reg Cab	No	6.5 Box	4.8L V8	3925	3750	6400		B30087	3,6	---	---	500	---	---	---	600	---	---	---	---
K1500 SILV/SIERRA	4x4	2004	Reg Cab	No	6.5 Box	5.3L V8	3925	3750	6400		B30087	3,6	---	---	500	---	---	---	600	---	---	---	---
K1500 SILV/SIERRA	4x4	2004	Reg Cab	No	8.0 Box	4.3L V6	3925	3750	6400		B30087	3,6	---	---	450	---	---	---	550	---	---	---	---
K1500 SILV/SIERRA	4x4	2004	Reg Cab	No	8.0 Box	4.8L V8	3925	3750	6400		B30087	3,6	---	---	500	---	---	---	600	---	---	---	---
K1500 SILV/SIERRA	4x4	2004	Reg Cab	No	8.0 Box	5.3L V8	3925	3750	6400		B30087	3,6	---	---	500	---	---	---	600	---	---	---	---

Notes:

1. Ballast amounts are based on a "Representative Vehicle," defined in the vehicle selection guide instructions, and must be modified for all other configurations for axle and GVWR compliance.
3. Requires bumper notching.
6. All New Style Only (2nd # in model # is 5 not 0) example: K15903. Refer to label in glove box for model number.
45. Ballast amounts for Model 760LT and 810PP are calculated on reduced plow weights produced after March 2006 (Serial Number 0603 or later). See the weight and dimensional charts at the end of this guide for reduced, current and old plow weights.

2005 to 1997 Chevy/GMC

													LT			HD			SPEEDWING™		POWER PLOW™		
													680LT	720LT	760LT[45]	760 HD	800 HD	860 HD	760SW	860SW	810PP[45]	8611LP	8611PP
												Blade Width	6'-8"	7'-2"	7'-6"	7'-6"	8'-0"	8'-6"	7'-6"	8'-6"	8'-0" 10'-0"	8'-6" 11'-0"	8'-6" 11'-0"
												Blade Assembly	B0680	B0720	B0761	B0760	B0800	B0860	B0765	B0865	B0810	B0863	B0861
												Joystick Control	B62073								B62109		
												Touchpad Control	B62142								B62141		
Model		Year	Body Style	DRW	Box Option	Engine Type	Min FGAWR	Min RGAWR	Min GVWR	Headlight Conversion Harness	POWER HITCH™ System Under-carriage	POWER HITCH™ System Notes	Ballast Guidelines, lbs (1)										
K1500 SILV/SIERRA	4x4	2004	Ext Cab	No	6.5 Box	4.8L V8	4180	6000	6900	HB3/HB4 use B62223	B30087	3,6	---	---	500	---	---	---	600	---	---	---	---
K1500 SILV/SIERRA	4x4	2004	Ext Cab	No	6.5 Box	4.8L V8	3925	3750	6400		B30087	3,6	---	---	550	---	---	---	---	---	---	---	---
K1500 SILV/SIERRA	4x4	2004	Ext Cab	No	6.5 Box	5.3L V8	4180	6000	6900		B30087	3,6	---	---	500	---	---	---	600	---	---	---	---
K1500 SILV/SIERRA	4x4	2004	Ext Cab	No	6.5 Box	5.3L V8	3925	3750	6400		B30087	3,6	---	---	550	---	---	---	---	---	---	---	---
K1500 SILV/SIERRA w/4WS	4x4	2004	Ext Cab	No	6.5 Box	4.8L V8	4180	6000	6900		B30087	3,6	---	---	250	---	---	---	350	---	---	---	---
K1500 SILV/SIERRA w/4WS	4x4	2004	Ext Cab	No	6.5 Box	5.3L V8	4180	6000	6900		B30087	3,6	---	---	250	---	---	---	350	---	---	---	---
K2500 SILV/SIERRA	4x4	2004	Ext Cab	No	6.5 Box	6.0L V8	4410	6000	8600		B30042	6	---	---	---	650	800	850	---	---	---	---	---
K2500 SILV/SIERRA	4x4	2004	Crew Cab	No	6.5 Box	6.0L V8	4500	6000	8600		B30042	6	---	---	---	1000	---	---	---	---	---	---	---
K2500HD SILV/SIERRA	4x4	2004	Reg Cab	No	8.0 Box	6.0L V8	4800	6084	9200		B30042	6	---	---	---	450	450	500	---	550	700	800	---
K2500HD SILV/SIERRA	4x4	2004	Reg Cab	No	8.0 Box	6.0L V8	4670	6084	9200		B30042	6	---	---	---	450	450	500	---	550	700	---	---
K2500HD SILV/SIERRA	4x4	2004	Reg Cab	No	8.0 Box	6.0L V8	4500	6084	9200		B30042	6	---	---	---	450	450	500	---	550	---	---	---
K2500HD SILV/SIERRA	4x4	2004	Reg Cab	No	8.0 Box	6.0L V8	4410	6084	9200		B30042	6	---	---	---	450	450	500	---	650	---	---	---
K2500HD SILV/SIERRA	4x4	2004	Reg Cab	No	8.0 Box	6.6L D	4800	6084	9200		B30042	6	---	---	---	750	850	900	---	---	---	---	---
K2500HD SILV/SIERRA	4x4	2004	Reg Cab	No	8.0 Box	8.1L V8	4800	6084	9200		B30042	6	---	---	---	550	550	550	---	650	---	---	---
K2500HD SILV/SIERRA	4x4	2004	Reg Cab	No	8.0 Box	8.1L V8	4670	6084	9200		B30042	6	---	---	---	550	650	700	---	---	---	---	---
K2500HD SILV/SIERRA	4x4	2004	Ext Cab	No	6.5 Box	6.0L V8	4800	6084	9200		B30042	6	---	---	---	550	550	550	---	600	800	---	---
K2500HD SILV/SIERRA	4x4	2004	Ext Cab	No	6.5 Box	6.0L V8	4670	6084	9200		B30042	6	---	---	---	550	550	550	---	600	---	---	---
K2500HD SILV/SIERRA	4x4	2004	Ext Cab	No	6.5 Box	6.0L V8	4500	6084	9200		B30042	6	---	---	---	550	550	550	---	800	---	---	---
K2500HD SILV/SIERRA	4x4	2004	Ext Cab	No	6.5 Box	8.1L V8	4800	6084	9200		B30042	6	---	---	---	600	650	650	---	---	---	---	---
K2500HD SILV/SIERRA	4x4	2004	Ext Cab	No	6.5 Box	8.1L V8	4670	6084	9200		B30042	6	---	---	---	1000	---	---	---	---	---	---	---
K2500HD SILV/SIERRA	4x4	2004	Ext Cab	No	8.0 Box	6.0L V8	4800	6084	9200		B30042	6	---	---	---	450	500	500	---	550	900	---	---
K2500HD SILV/SIERRA	4x4	2004	Ext Cab	No	8.0 Box	6.0L V8	4670	6084	9200		B30042	6	---	---	---	450	500	500	---	550	---	---	---
K2500HD SILV/SIERRA	4x4	2004	Ext Cab	No	8.0 Box	6.0L V8	4500	6084	9200		B30042	6	---	---	---	650	750	800	---	---	---	---	---
K2500HD SILV/SIERRA	4x4	2004	Ext Cab	No	8.0 Box	8.1L V8	4800	6084	9200		B30042	6	---	---	---	1000	---	---	---	---	---	---	---
K2500HD SILV/SIERRA	4x4	2004	Crew Cab	No	6.5 Box	6.0L V8	4800	6084	9200		B30042	6	---	---	---	450	450	450	---	500	---	---	---
K2500HD SILV/SIERRA	4x4	2004	Crew Cab	No	6.5 Box	6.0L V8	4670	6084	9200		B30042	6	---	---	---	450	450	450	---	850	---	---	---
K2500HD SILV/SIERRA	4x4	2004	Crew Cab	No	6.5 Box	6.0L V8	4500	6084	9200		B30042	6	---	---	---	1000	---	---	---	---	---	---	---
K2500HD SILV/SIERRA	4x4	2004	Crew Cab	No	8.0 Box	6.0L V8	4800	6084	9200		B30042	6	---	---	---	400	450	450	---	550	---	---	---
K2500HD SILV/SIERRA	4x4	2004	Crew Cab	No	8.0 Box	6.0L V8	4670	6084	9200		B30042	6	---	---	---	550	650	700	---	---	---	---	---
K2500HD SILV/SIERRA	4x4	2004	All	No	Chassis	All	All	All	8501		B30042	6	---	---	---	?	?	?	---	?	?	?	---

Notes:

1. Ballast amounts are based on a "Representative Vehicle," defined in the vehicle selection guide instructions, and must be modified for all other configurations for axle and GVWR compliance.
3. Requires bumper notching.
6. All New Style Only (2nd # in model # is 5 not 0) example: K15903. Refer to label in glove box for model number.
45. Ballast amounts for Model 760LT and 810PP are calculated on reduced plow weights produced after March 2006 (Serial Number 0603 or later). See the weight and dimensional charts at the end of this guide for reduced, current and old plow weights.

2005 to 1997 Chevy/GMC

													LT			HD			SPEEDWING™		POWER PLOW™		
													680LT	720LT	760LT[45]	760 HD	800 HD	860 HD	760SW	860SW	810PP[45]	8611LP	8611PP
												Blade Width	6'-8"	7'-2"	7'-6"	7'-6"	8'-0"	8'-6"	7'-6"	8'-6"	8'-0" 10'-0"	8'-6" 11'-0"	8'-6" 11'-0"
												Blade Assembly	B0680	B0720	B0761	B0760	B0800	B0860	B0765	B0865	B0810	B0863	B0861
												Joystick Control	B62073								B62109		
												Touchpad Control	B62142								B62141		
Model		Year	Body Style	DRW	Box Option	Engine Type	Min FGAWR	Min RGAWR	Min GVWR	Headlight Conversion Harness	POWER HITCH™ System Under-carriage	POWER HITCH™ System Notes	Ballast Guidelines, lbs (1)										
K3500 SILV/SIERRA	4x4	2004	Reg Cab	Yes	8.0 Box	6.0L V8	4800	8550	11400	HB3/HB4 use B62223	B30042	6	---	---	---	---	---	250	---	300	450	900	---
K3500 SILV/SIERRA	4x4	2004	Reg Cab	Yes	8.0 Box	6.0L V8	4670	8550	11400		B30042	6	---	---	---	---	---	250	---	300	750	---	---
K3500 SILV/SIERRA	4x4	2004	Reg Cab	Yes	8.0 Box	6.0L V8	4500	8550	11400		B30042	6	---	---	---	---	---	250	---	500	---	---	---
K3500 SILV/SIERRA	4x4	2004	Reg Cab	Yes	8.0 Box	6.6L D	4800	8550	11400		B30042	6	---	---	---	---	---	1000	---	---	---	---	---
K3500 SILV/SIERRA	4x4	2004	Reg Cab	Yes	8.0 Box	8.1L V8	4800	8550	11400		B30042	6	---	---	---	---	---	450	---	800	---	---	---
K3500 SILV/SIERRA	4x4	2004	Reg Cab	Yes	8.0 Box	8.1L V8	4670	8550	11400		B30042	6	---	---	---	---	---	900	---	---	---	---	---
K3500 SILV/SIERRA	4x4	2004	Ext Cab	Yes	8.0 Box	6.0L V8	4800	8550	11400		B30042	6	---	---	---	---	---	200	---	250	---	---	---
K3500 SILV/SIERRA	4x4	2004	Crew Cab	Yes	8.0 Box	6.0L V8	4800	8550	11400		B30042	6	---	---	---	---	---	300	---	750	---	---	---
K3500 SILV/SIERRA	4x4	2004	All	Yes	Chassis	All	All	All	8501		B30042	6	---	---	---	---	---	?	---	?	?	?	---
C4500	4x2	2004	All	Yes	Chassis	All	All	All	10001	2B use B62220 or 1A/2A use B62227	B30172	-	---	---	---	---	---	?	---	?	?	?	?
C5500	4x2	2004	All	Yes	Chassis	All	All	All	10001		B30172	-	---	---	---	---	---	?	---	?	?	?	?
TRAILBLAZER/ENVOY	4x4	2003	SU-4DR	No	---	4.2L V6	2950	3400	5750	HB3/HB4 use B62223 or B62224	B30174	-	100	100	---	---	---	---	---	---	---	---	---
TRAILBLAZER EXT/ENVOY XL	4x4	2003	SU-4DR	No	---	4.2L V6	3200	3400	6400		B30174	-	50	50	---	---	---	---	---	---	---	---	---
TRAILBLAZER EXT/ENVOY XL	4x4	2003	SU-4DR	No	---	5.3L V8	3200	3400	6400		B30174	-	50	50	---	---	---	---	---	---	---	---	---
K1500 SILV/SIERRA	4x4	2003	Reg Cab	No	6.5 Box	4.3L V6	3925	3750	6400	HB3/HB4 use B62223	B30087	3,6	---	---	450	---	---	---	550	---	---	---	---
K1500 SILV/SIERRA	4x4	2003	Reg Cab	No	6.5 Box	4.8L V8	3925	3750	6400		B30087	3,6	---	---	500	---	---	---	600	---	---	---	---
K1500 SILV/SIERRA	4x4	2003	Reg Cab	No	6.5 Box	5.3L V8	3925	3750	6400		B30087	3,6	---	---	500	---	---	---	600	---	---	---	---
K1500 SILV/SIERRA	4x4	2003	Reg Cab	No	8.0 Box	4.3L V6	3925	3750	6400		B30087	3,6	---	---	450	---	---	---	550	---	---	---	---
K1500 SILV/SIERRA	4x4	2003	Reg Cab	No	8.0 Box	4.8L V8	3925	3750	6400		B30087	3,6	---	---	450	---	---	---	550	---	---	---	---
K1500 SILV/SIERRA	4x4	2003	Reg Cab	No	8.0 Box	5.3L V8	3925	3750	6400		B30087	3,6	---	---	450	---	---	---	550	---	---	---	---
K1500 SILV/SIERRA	4x4	2003	Ext Cab	No	6.5 Box	4.8L V8	3925	3750	6400		B30087	3,6	---	---	450	---	---	---	---	---	---	---	---
K1500 SILV/SIERRA	4x4	2003	Ext Cab	No	6.5 Box	5.3L V8	3925	3750	6400		B30087	3,6	---	---	450	---	---	---	---	---	---	---	---
K1500 SILV/SIERRA w/4WS	4x4	2003	Ext Cab	No	6.5 Box	5.3L V8	3925	3750	6900		B30087	3,6	---	---	450	---	---	---	---	---	---	---	---
K1500HD SILV/SIERRA	4x4	2003	Crew Cab	No	6.5 Box	6.0L V8	4500	6000	8600		B30042	6	---	---	---	650	650	650	---	700	900	---	---
K1500HD SILV/SIERRA	4x4	2003	Crew Cab	No	6.5 Box	6.0L V8	4410	6000	8600		B30042	6	---	---	---	650	650	650	---	700	---	---	---
K1500HD SILV/SIERRA w/4WS	4x4	2003	Crew Cab	No	6.5 Box	6.0L V8	4500	6000	8600		B30042	6	---	---	---	450	450	450	---	500	950	---	---
K1500HD SILV/SIERRA w/4WS	4x4	2003	Crew Cab	No	6.5 Box	6.0L V8	4410	6000	8600		B30042	6	---	---	---	450	450	450	---	500	---	---	---
K2500 SILV/SIERRA	4x4	2003	Ext Cab	No	6.5 Box	6.0L V8	4500	6000	8600		B30042	6	---	---	---	500	550	550	---	900	---	---	---
K2500 SILV/SIERRA	4x4	2003	Ext Cab	No	6.5 Box	6.0L V8	4410	6000	8600		B30042	6	---	---	---	650	800	850	---	---	---	---	---
K2500HD SILV/SIERRA	4x4	2003	Reg Cab	No	8.0 Box	6.0L V8	4800	6084	9200		B30042	6	---	---	---	450	450	450	---	550	700	800	---
K2500HD SILV/SIERRA	4x4	2003	Reg Cab	No	8.0 Box	6.0L V8	4500	6084	9200		B30042	6	---	---	---	450	450	450	---	550	---	---	---
K2500HD SILV/SIERRA	4x4	2003	Reg Cab	No	8.0 Box	6.6L D	4800	6084	9200		B30042	6	---	---	---	800	900	950	---	---	---	---	---

Notes:

1. Ballast amounts are based on a "Representative Vehicle," defined in the vehicle selection guide instructions, and must be modified for all other configurations for axle and GVWR compliance.
3. Requires bumper notching.
6. All New Style Only (2nd # in model # is 5 not 0) example: K15903. Refer to label in glove box for model number.
45. Ballast amounts for Model 760LT and 810PP are calculated on reduced plow weights produced after March 2006 (Serial Number 0603 or later). See the weight and dimensional charts at the end of this guide for reduced, current and old plow weights.

2005 to 1997 Chevy/GMC

													LT			HD			SPEEDWING™		POWER PLOW™		
													680LT	720LT	760LT[45]	760 HD	800 HD	860 HD	760SW	860SW	810PP[45]	8611LP	8611PP
												Blade Width	6'-8"	7'-2"	7'-6"	7'-6"	8'-0"	8'-6"	7'-6"	8'-6"	8'-0" 10'-0"	8'-6" 11'-0"	8'-6" 11'-0"
												Blade Assembly	B0680	B0720	B0761	B0760	B0800	B0860	B0765	B0865	B0810	B0863	B0861
												Joystick Control	B62073								B62109		
												Touchpad Control	B62142								B62141		
Model		Year	Body Style	DRW	Box Option	Engine Type	Min FGAWR	Min RGAWR	Min GVWR	Headlight Conversion Harness	POWER HITCH™ System Under-carriage	POWER HITCH™ System Notes	Ballast Guidelines, lbs (1)										
K2500HD SILV/SIERRA	4x4	2003	Reg Cab	No	8.0 Box	8.1L V8	4800	6084	9200	HB3/HB4 use B62223	B30042	6	---	---	---	550	550	550	---	650	---	---	---
K2500HD SILV/SIERRA	4x4	2003	Ext Cab	No	6.5 Box	6.0L V8	4800	6084	9200		B30042	6	---	---	---	500	550	550	---	600	750	---	---
K2500HD SILV/SIERRA	4x4	2003	Ext Cab	No	6.5 Box	6.0L V8	4670	6084	9200		B30042	6	---	---	---	500	550	550	---	600	---	---	---
K2500HD SILV/SIERRA	4x4	2003	Ext Cab	No	6.5 Box	8.1L V8	4800	6084	9200		B30042	6	---	---	---	700	800	850	---	---	---	---	---
K2500HD SILV/SIERRA	4x4	2003	Ext Cab	No	8.0 Box	6.0L V8	4800	6084	9200		B30042	6	---	---	---	450	450	450	---	550	900	---	---
K2500HD SILV/SIERRA	4x4	2003	Ext Cab	No	8.0 Box	6.0L V8	4670	6084	9200		B30042	6	---	---	---	450	450	450	---	550	---	---	---
K2500HD SILV/SIERRA	4x4	2003	Crew Cab	No	6.5 Box	6.0L V8	4800	6084	9200		B30042	6	---	---	---	400	400	400	---	500	---	---	---
K2500HD SILV/SIERRA	4x4	2003	Crew Cab	No	6.5 Box	6.0L V8	4670	6084	9200		B30042	6	---	---	---	400	400	400	---	750	---	---	---
K2500HD SILV/SIERRA	4x4	2003	Crew Cab	No	8.0 Box	6.0L V8	4800	6084	9200		B30042	6	---	---	---	400	400	450	---	500	---	---	---
K2500HD SILV/SIERRA	4x4	2003	Crew Cab	No	8.0 Box	6.0L V8	4670	6084	9200		B30042	6	---	---	---	500	600	650	---	---	---	---	---
K2500HD SILV/SIERRA	4x4	2003	All	No	Chassis	All	All	All	8501		B30042	6	---	---	---	?	?	?	---	?	?	?	---
K3500 SILV/SIERRA	4x4	2003	Reg Cab	Yes	8.0 Box	6.0L V8	4800	8550	11400		B30042	6	---	---	---	---	---	250	---	300	450	900	---
K3500 SILV/SIERRA	4x4	2003	Reg Cab	Yes	8.0 Box	6.0L V8	4500	8550	11400		B30042	6	---	---	---	---	---	250	---	500	---	---	---
K3500 SILV/SIERRA	4x4	2003	Reg Cab	Yes	8.0 Box	6.6L D	4800	8550	11400		B30042	6	---	---	---	---	---	1000	---	---	---	---	---
K3500 SILV/SIERRA	4x4	2003	Reg Cab	Yes	8.0 Box	8.1L V8	4800	8550	11400		B30042	6	---	---	---	---	---	450	---	850	---	---	---
K3500 SILV/SIERRA	4x4	2003	Ext Cab	Yes	8.0 Box	6.0L V8	4800	8550	11400		B30042	6	---	---	---	---	---	200	---	300	1000	---	---
K3500 SILV/SIERRA	4x4	2003	Ext Cab	Yes	8.0 Box	8.1L V8	4800	8550	11400		B30042	6	---	---	---	---	---	850	---	---	---	---	---
K3500 SILV/SIERRA	4x4	2003	Crew Cab	Yes	8.0 Box	6.0L V8	4800	8550	11400		B30042	6	---	---	---	---	---	250	---	650	---	---	---
K3500 SILV/SIERRA	4x4	2003	All	Yes	Chassis	All	All	All	8501		B30042	6	---	---	---	---	---	?	---	?	?	?	---
C4500	4x2	2003	All	Yes	Chassis	All	All	All	10001	2B use B62220 or 1A/2A use B62227	B30172	-	---	---	---	---	---	?	---	?	?	?	?
C5500	4x2	2003	All	Yes	Chassis	All	All	All	10001		B30172	-	---	---	---	---	---	?	---	?	?	?	?
K1500 SILV/SIERRA	4x4	2002	Reg Cab	No	6.5 Box	4.3L V6	3925	3750	6100	HB3/HB4 use B62224	B30087	3,6	---	---	450	---	---	---	550	---	---	---	---
K1500 SILV/SIERRA	4x4	2002	Reg Cab	No	6.5 Box	4.8L V8	3925	3750	6100		B30087	3,6	---	---	500	---	---	---	600	---	---	---	---
K1500 SILV/SIERRA	4x4	2002	Reg Cab	No	6.5 Box	5.3L V8	3925	3750	6100		B30087	3,6	---	---	500	---	---	---	600	---	---	---	---
K1500 SILV/SIERRA	4x4	2002	Reg Cab	No	8.0 Box	4.3L V6	3925	3750	6400		B30087	3,6	---	---	400	---	---	---	500	---	---	---	---
K1500 SILV/SIERRA	4x4	2002	Reg Cab	No	8.0 Box	4.8L V8	3925	3750	6400		B30087	3,6	---	---	450	---	---	---	550	---	---	---	---
K1500 SILV/SIERRA	4x4	2002	Reg Cab	No	8.0 Box	5.3L V8	3925	3750	6400		B30087	3,6	---	---	450	---	---	---	550	---	---	---	---
K1500 SILV/SIERRA	4x4	2002	Ext Cab	No	6.5 Box	4.3L V6	3925	3750	6400		B30087	3,6	---	---	450	---	---	---	---	---	---	---	---
K1500 SILV/SIERRA	4x4	2002	Ext Cab	No	6.5 Box	4.8L V8	3925	3750	6400		B30087	3,6	---	---	500	---	---	---	---	---	---	---	---
K1500 SILV/SIERRA	4x4	2002	Ext Cab	No	6.5 Box	5.3L V8	3925	3750	6400		B30087	3,6	---	---	500	---	---	---	---	---	---	---	---

Notes:

1. Ballast amounts are based on a "Representative Vehicle," defined in the vehicle selection guide instructions, and must be modified for all other configurations for axle and GVWR compliance.
3. Requires bumper notching.
6. All New Style Only (2nd # in model # is 5 not 0) example: K15903. Refer to label in glove box for model number.
45. Ballast amounts for Model 760LT and 810PP are calculated on reduced plow weights produced after March 2006 (Serial Number 0603 or later). See the weight and dimensional charts at the end of this guide for reduced, current and old plow weights.

2005 to 1997 Chevy/GMC

													POWER HITCH										
													LT			HD			SPEEDWING™		POWER PLOW™		
													680LT	720LT	760LT[45]	760 HD	800 HD	860 HD	760SW	860SW	810PP[45]	8611LP	8611PP
												Blade Width	6'-8"	7'-2"	7'-6"	7'-6"	8'-0"	8'-6"	7'-6"	8'-6"	8'-0" 10'-0"	8'-6" 11'-0"	8'-6" 11'-0"
												Blade Assembly	B0680	B0720	B0761	B0760	B0800	B0860	B0765	B0865	B0810	B0863	B0861
												Joystick Control	B62073								B62109		
												Touchpad Control	B62142								B62141		
Model		Year	Body Style	DRW	Box Option	Engine Type	Min FGAWR	Min RGAWR	Min GVWR	Headlight Conversion Harness	POWER HITCH™ System Under-carriage	POWER HITCH™ System Notes	Ballast Guidelines, lbs (1)										
K2500 SILV/SIERRA	4x4	2002	Ext Cab	No	6.5 Box	6.0L V8	4500	6000	8600		B30042	6	---	---	---	700	800	850	---	---	---	---	---
K2500HD SILV/SIERRA	4x4	2002	Reg Cab	No	8.0 Box	6.0L V8	4800	6084	9200		B30042	6	---	---	---	500	550	550	---	600	750	1000	---
K2500HD SILV/SIERRA	4x4	2002	Reg Cab	No	8.0 Box	6.0L V8	4500	6084	9200		B30042	6	---	---	---	500	550	550	---	600	---	---	---
K2500HD SILV/SIERRA	4x4	2002	Reg Cab	No	8.0 Box	6.6L D	4800	6084	9200		B30042	6	---	---	---	800	850	900	---	---	---	---	---
K2500HD SILV/SIERRA	4x4	2002	Reg Cab	No	8.0 Box	8.1L V8	4800	6084	9200		B30042	6	---	---	---	600	650	650	---	900	---	---	---
K2500HD SILV/SIERRA	4x4	2002	Ext Cab	No	6.5 Box	6.0L V8	4800	6084	9200		B30042	6	---	---	---	550	550	550	---	650	800	---	---
K2500HD SILV/SIERRA	4x4	2002	Ext Cab	No	6.5 Box	6.0L V8	4670	6084	9200		B30042	6	---	---	---	550	550	550	---	650	---	---	---
K2500HD SILV/SIERRA	4x4	2002	Ext Cab	No	6.5 Box	8.1L V8	4800	6084	9200		B30042	6	---	---	---	850	1000	---	---	---	---	---	---
K2500HD SILV/SIERRA	4x4	2002	Ext Cab	No	8.0 Box	6.0L V8	4800	6084	9200		B30042	6	---	---	---	500	500	500	---	550	---	---	---
K2500HD SILV/SIERRA	4x4	2002	Ext Cab	No	8.0 Box	6.0L V8	4670	6084	9200		B30042	6	---	---	---	500	500	500	---	650	---	---	---
K2500HD SILV/SIERRA	4x4	2002	Crew Cab	No	6.5 Box	6.0L V8	4800	6084	9200		B30042	6	---	---	---	400	450	450	---	500	---	---	---
K2500HD SILV/SIERRA	4x4	2002	Crew Cab	No	6.5 Box	6.0L V8	4500	6084	9200		B30042	6	---	---	---	850	950	1000	---	---	---	---	---
K2500HD SILV/SIERRA	4x4	2002	Crew Cab	No	8.0 Box	6.0L V8	4800	6084	9200		B30042	6	---	---	---	400	450	450	---	500	---	---	---
K3500 SILV/SIERRA	4x4	2002	Reg Cab	Yes	8.0 Box	6.0L V8	4800	8550	11400		B30042	6	---	---	---	---	---	300	---	400	550	---	---
K3500 SILV/SIERRA	4x4	2002	Reg Cab	Yes	8.0 Box	6.0L V8	4500	8550	11400		B30042	6	---	---	---	---	---	350	---	700	---	---	---
K3500 SILV/SIERRA	4x4	2002	Reg Cab	Yes	8.0 Box	6.6L D	4800	8550	11400	HB3/HB4 use B62224	B30042	6	---	---	---	---	---	1000	---	---	---	---	---
K3500 SILV/SIERRA	4x4	2002	Reg Cab	Yes	8.0 Box	8.1L V8	4800	8550	11400		B30042	6	---	---	---	---	---	700	---	---	---	---	---
K3500 SILV/SIERRA	4x4	2002	Ext Cab	Yes	8.0 Box	6.0L V8	4800	8550	11400		B30042	6	---	---	---	---	---	200	---	250	950	---	---
K3500 SILV/SIERRA	4x4	2002	Crew Cab	Yes	8.0 Box	6.0L V8	4800	8550	11400		B30042	6	---	---	---	---	---	150	---	450	---	---	---
K3500 SILV/SIERRA	4x4	2002	All	Yes	Chassis	All	All	All	8501		B30042	6	---	---	---	---	---	?	---	?	?	?	---
K1500 SILV/SIERRA	4x4	2001	Reg Cab	No	6.5 Box	4.3L V6	3925	3750	6100		B30087	3,6	---	---	450	---	---	---	550	---	---	---	---
K1500 SILV/SIERRA	4x4	2001	Reg Cab	No	6.5 Box	4.3L V6	3600	3750	6100		B30087	3,6	---	---	450	---	---	---	---	---	---	---	---
K1500 SILV/SIERRA	4x4	2001	Reg Cab	No	6.5 Box	4.8L V8	3925	3750	6100		B30087	3,6	---	---	500	---	---	---	600	---	---	---	---
K1500 SILV/SIERRA	4x4	2001	Reg Cab	No	6.5 Box	4.8L V8	3600	3750	6100		B30087	3,6	---	---	700	---	---	---	---	---	---	---	---
K1500 SILV/SIERRA	4x4	2001	Reg Cab	No	6.5 Box	5.3L V8	3925	3750	6100		B30087	3,6	---	---	500	---	---	---	600	---	---	---	---
K1500 SILV/SIERRA	4x4	2001	Reg Cab	No	6.5 Box	5.3L V8	3600	3750	6100		B30087	3,6	---	---	700	---	---	---	---	---	---	---	---
K1500 SILV/SIERRA	4x4	2001	Reg Cab	No	8.0 Box	4.3L V6	3925	3750	6400		B30087	3,6	---	---	450	---	---	---	550	---	---	---	---
K1500 SILV/SIERRA	4x4	2001	Reg Cab	No	8.0 Box	4.3L V6	3600	3750	6400		B30087	3,6	---	---	450	---	---	---	---	---	---	---	---
K1500 SILV/SIERRA	4x4	2001	Reg Cab	No	8.0 Box	4.8L V8	3925	3750	6400		B30087	3,6	---	---	450	---	---	---	550	---	---	---	---
K1500 SILV/SIERRA	4x4	2001	Reg Cab	No	8.0 Box	4.8L V8	3600	3750	6400		B30087	3,6	---	---	900	---	---	---	---	---	---	---	---
K1500 SILV/SIERRA	4x4	2001	Reg Cab	No	8.0 Box	5.3L V8	3925	3750	6400		B30087	3,6	---	---	450	---	---	---	550	---	---	---	---
K1500 SILV/SIERRA	4x4	2001	Reg Cab	No	8.0 Box	5.3L V8	3600	3750	6400		B30087	3,6	---	---	900	---	---	---	---	---	---	---	---

Notes:

1. Ballast amounts are based on a "Representative Vehicle," defined in the vehicle selection guide instructions, and must be modified for all other configurations for axle and GVWR compliance.
3. Requires bumper notching.
6. All New Style Only (2nd # in model # is 5 not 0) example: K15903. Refer to label in glove box for model number.
45. Ballast amounts for Model 760LT and 810PP are calculated on reduced plow weights produced after March 2006 (Serial Number 0603 or later). See the weight and dimensional charts at the end of this guide for reduced, current and old plow weights.

2005 to 1997 Chevy/GMC

													LT			HD			SPEEDWING™		POWER PLOW™		
													680LT	720LT	760LT[45]	760 HD	800 HD	860 HD	760SW	860SW	810PP[45]	8611LP	8611PP
												Blade Width	6'-8"	7'-2"	7'-6"	7'-6"	8'-0"	8'-6"	7'-6"	8'-6"	8'-0" 10'-0"	8'-6" 11'-0"	8'-6" 11'-0"
												Blade Assembly	B0680	B0720	B0761	B0760	B0800	B0860	B0765	B0865	B0810	B0863	B0861
												Joystick Control	B62073								B62109		
												Touchpad Control	B62142								B62141		
Model		Year	Body Style	DRW	Box Option	Engine Type	Min FGAWR	Min RGAWR	Min GVWR	Headlight Conversion Harness	POWER HITCH™ System Under-carriage	POWER HITCH™ System Notes	Ballast Guidelines, lbs (1)										
K1500 SILV/SIERRA	4x4	2001	Ext Cab	No	6.5 Box	4.3L V6	3925	3750	6400	HB3/HB4 use B62224	B30087	3,6	---	---	450	---	---	---	---	---	---	---	---
K1500 SILV/SIERRA	4x4	2001	Ext Cab	No	6.5 Box	4.8L V8	3925	3750	6400		B30087	3,6	---	---	500	---	---	---	---	---	---	---	---
K1500 SILV/SIERRA	4x4	2001	Ext Cab	No	6.5 Box	5.3L V8	3925	3750	6400		B30087	3,6	---	---	500	---	---	---	---	---	---	---	---
K2500 SILV/SIERRA	4x4	2001	Ext Cab	No	6.5 Box	6.0L V8	4500	6000	8600		B30042	6	---	---	---	650	650	650	---	---	---	---	---
K2500 SILV/SIERRA	4x4	2001	Ext Cab	No	6.5 Box	6.0L V8	4410	6000	8600		B30042	6	---	---	---	850	1000	---	---	---	---	---	---
K2500HD SILV/SIERRA	4x4	2001	Reg Cab	No	8.0 Box	6.0L V8	4800	6084	9200		B30042	6	---	---	---	500	500	500	---	600	750	900	---
K2500HD SILV/SIERRA	4x4	2001	Reg Cab	No	8.0 Box	6.0L V8	4500	6084	9200		B30042	6	---	---	---	500	500	500	---	600	---	---	---
K2500HD SILV/SIERRA	4x4	2001	Reg Cab	No	8.0 Box	6.6L D	4800	6084	9200		B30042	6	---	---	---	650	750	800	---	---	---	---	---
K2500HD SILV/SIERRA	4x4	2001	Reg Cab	No	8.0 Box	8.1L V8	4800	6084	9200		B30042	6	---	---	---	600	600	600	---	800	---	---	---
K2500HD SILV/SIERRA	4x4	2001	Ext Cab	No	6.5 Box	6.0L V8	4800	6084	9200		B30042	6	---	---	---	500	500	500	---	600	750	---	---
K2500HD SILV/SIERRA	4x4	2001	Ext Cab	No	6.5 Box	6.0L V8	4670	6084	9200		B30042	6	---	---	---	500	500	500	---	600	---	---	---
K2500HD SILV/SIERRA	4x4	2001	Ext Cab	No	6.5 Box	8.1L V8	4800	6084	9200		B30042	6	---	---	---	750	900	950	---	---	---	---	---
K2500HD SILV/SIERRA	4x4	2001	Ext Cab	No	8.0 Box	6.0L V8	4800	6084	9200		B30042	6	---	---	---	500	500	500	---	550	---	---	---
K2500HD SILV/SIERRA	4x4	2001	Ext Cab	No	8.0 Box	6.0L V8	4670	6084	9200		B30042	6	---	---	---	500	500	500	---	700	---	---	---
K2500HD SILV/SIERRA	4x4	2001	Crew Cab	No	6.5 Box	6.0L V8	4800	6084	9200		B30042	6	---	---	---	450	450	450	---	550	---	---	---
K2500HD SILV/SIERRA	4x4	2001	Crew Cab	No	8.0 Box	6.0L V8	4800	6084	9200		B30042	6	---	---	---	450	500	500	---	900	---	---	---
K2500HD SILV/SIERRA	4x4	2001	All	No	Chassis	All	All	All	8501		B30042	6	---	---	---	?	?	?	---	?	?	?	---
K3500 SILV/SIERRA	4x4	2001	Reg Cab	Yes	8.0 Box	6.0L V8	4800	8550	11400		B30042	6	---	---	---	---	---	300	---	350	500	---	---
K3500 SILV/SIERRA	4x4	2001	Reg Cab	Yes	8.0 Box	6.0L V8	4670	8550	11400		B30042	6	---	---	---	---	---	250	---	350	700	---	---
K3500 SILV/SIERRA	4x4	2001	Reg Cab	Yes	8.0 Box	6.6L D	4800	8550	11400		B30042	6	---	---	---	---	---	950	---	---	---	---	---
K3500 SILV/SIERRA	4x4	2001	Reg Cab	Yes	8.0 Box	8.1L V8	4800	8550	11400		B30042	6	---	---	---	---	---	600	---	1000	---	---	---
K3500 SILV/SIERRA	4x4	2001	Reg Cab	Yes	8.0 Box	8.1L V8	4670	8550	11400		B30042	6	---	---	---	---	---	900	---	---	---	---	---
K3500 SILV/SIERRA	4x4	2001	Ext Cab	Yes	8.0 Box	6.0L V8	4800	8550	11400		B30042	6	---	---	---	---	---	250	---	300	---	---	---
K3500 SILV/SIERRA	4x4	2001	Ext Cab	Yes	8.0 Box	6.0L V8	4670	8550	11400		B30042	6	---	---	---	---	---	350	---	750	---	---	---
K3500 SILV/SIERRA	4x4	2001	Ext Cab	Yes	8.0 Box	6.0L V8	4500	8550	11400		B30042	6	---	---	---	---	---	850	---	---	---	---	---
K3500 SILV/SIERRA	4x4	2001	Crew Cab	Yes	8.0 Box	6.0L V8	4800	8550	11400		B30042	6	---	---	---	---	---	100	---	250	---	---	---
K3500 SILV/SIERRA	4x4	2001	Crew Cab	Yes	8.0 Box	6.0L V8	4670	8550	11400		B30042	6	---	---	---	---	---	450	---	900	---	---	---
K3500 SILV/SIERRA	4x4	2001	All	Yes	Chassis	All	All	All	8501		B30042	6	---	---	---	---	---	?	---	?	?	?	---
C3500 HD	4x2	2001	All	Yes	Chassis	All	All	All	15000	HB3/HB4 use B62223	B30071	-	---	---	---	---	---	?	---	?	?	?	---
SUBURBAN K1500	4x4	2000	SU-4DR	No	---	5.7L V8	3925	4800	8050		B30080	-	---	---	0	---	---	---	---	---	---	---	---
SUBURBAN K1500	4x4	2000	SU-4DR	No	---	5.7L V8	3925	4000	7300		B30080	-	---	---	0	---	---	---	---	---	---	---	---

Notes:

1. Ballast amounts are based on a "Representative Vehicle," defined in the vehicle selection guide instructions, and must be modified for all other configurations for axle and GVWR compliance.
3. Requires bumper notching.
6. All New Style Only (2nd # in model # is 5 not 0) example: K15903. Refer to label in glove box for model number.
45. Ballast amounts for Model 760LT and 810PP are calculated on reduced plow weights produced after March 2006 (Serial Number 0603 or later). See the weight and dimensional charts at the end of this guide for reduced, current and old plow weights.

2005 to 1997 Chevy/GMC

													LT			HD			SPEEDWING™		POWER PLOW™		
													680LT	720LT	760LT[45]	760 HD	800 HD	860 HD	760SW	860SW	810PP[45]	8611LP	8611PP
												Blade Width	6'-8"	7'-2"	7'-6"	7'-6"	8'-0"	8'-6"	7'-6"	8'-6"	8'-0" 10'-0"	8'-6" 11'-0"	8'-6" 11'-0"
												Blade Assembly	B0680	B0720	B0761	B0760	B0800	B0860	B0765	B0865	B0810	B0863	B0861
												Joystick Control	B62073								B62109		
												Touchpad Control	B62142								B62141		
Model		Year	Body Style	DRW	Box Option	Engine Type	Min FGAWR	Min RGAWR	Min GVWR	Headlight Conversion Harness	POWER HITCH™ System Under-carriage	POWER HITCH™ System Notes	Ballast Guidelines, lbs (1)										
K1500 SILV/SIERRA	4x4	2000	Reg Cab	No	6.5 Box	4.3L V6	3925	3750	6100	HB3/HB4 use B62224	B30087	3,6	---	---	400	---	---	---	500	---	---	---	---
K1500 SILV/SIERRA	4x4	2000	Reg Cab	No	6.5 Box	4.3L V6	3600	3750	6100		B30087	3,6	---	---	400	---	---	---	---	---	---	---	---
K1500 SILV/SIERRA	4x4	2000	Reg Cab	No	6.5 Box	4.8L V8	3925	3750	6100		B30087	3,6	---	---	400	---	---	---	500	---	---	---	---
K1500 SILV/SIERRA	4x4	2000	Reg Cab	No	6.5 Box	4.8L V8	3600	3750	6100		B30087	3,6	---	---	600	---	---	---	---	---	---	---	---
K1500 SILV/SIERRA	4x4	2000	Reg Cab	No	6.5 Box	5.3L V8	3925	3750	6100		B30087	3,6	---	---	400	---	---	---	500	---	---	---	---
K1500 SILV/SIERRA	4x4	2000	Reg Cab	No	6.5 Box	5.3L V8	3600	3750	6100		B30087	3,6	---	---	600	---	---	---	---	---	---	---	---
K1500 SILV/SIERRA	4x4	2000	Reg Cab	No	8.0 Box	4.3L V6	3925	3750	6400		B30087	3,6	---	---	400	---	---	---	500	---	---	---	---
K1500 SILV/SIERRA	4x4	2000	Reg Cab	No	8.0 Box	4.3L V6	3600	3750	6400		B30087	3,6	---	---	600	---	---	---	---	---	---	---	---
K1500 SILV/SIERRA	4x4	2000	Reg Cab	No	8.0 Box	4.8L V8	3925	3750	6400		B30087	3,6	---	---	400	---	---	---	500	---	---	---	---
K1500 SILV/SIERRA	4x4	2000	Reg Cab	No	8.0 Box	4.8L V8	3600	3750	6400		B30087	3,6	---	---	850	---	---	---	---	---	---	---	---
K1500 SILV/SIERRA	4x4	2000	Reg Cab	No	8.0 Box	5.3L V8	3925	3750	6400		B30087	3,6	---	---	400	---	---	---	500	---	---	---	---
K1500 SILV/SIERRA	4x4	2000	Reg Cab	No	8.0 Box	5.3L V8	3600	3750	6400		B30087	3,6	---	---	850	---	---	---	---	---	---	---	---
K1500 SILV/SIERRA	4x4	2000	Ext Cab	No	6.5 Box	4.8L V8	3925	3750	6400		B30087	3,6	---	---	450	---	---	---	---	---	---	---	---
K1500 SILV/SIERRA	4x4	2000	Ext Cab	No	6.5 Box	5.3L V8	3925	3750	6400		B30087	3,6	---	---	450	---	---	---	---	---	---	---	---
K1500 SILV/SIERRA	4x4	2000	Ext Cab	No	8.0 Box	4.8L V8	3925	3750	6400		B30087	3,6	---	---	350	---	---	---	---	---	---	---	---
K1500 SILV/SIERRA	4x4	2000	Ext Cab	No	8.0 Box	5.3L V8	3925	3750	6400		B30087	3,6	---	---	350	---	---	---	---	---	---	---	---
K2500 CLASSIC	4x4	2000	Reg Cab	No	8.0 Box	5.7L V8	4500	6000	8600	2B use B62220 or HB3/HB4 use B62223	B30043	-	---	---	---	400	400	400	---	500	800	---	---
K2500 CLASSIC	4x4	2000	Reg Cab	No	8.0 Box	6.5L D	4500	6000	8600		B30043	-	---	---	---	400	400	400	---	600	---	---	---
K2500 CLASSIC	4x4	2000	Reg Cab	No	8.0 Box	7.4L V8	4500	6000	8600		B30043	-	---	---	---	400	400	400	---	500	---	---	---
K2500 CLASSIC	4x4	2000	Ext Cab	No	6.5 Box	5.7L V8	4500	6000	8600		B30043	-	---	---	---	500	500	500	---	600	---	---	---
K2500 CLASSIC	4x4	2000	Ext Cab	No	6.5 Box	6.5L D	4500	6000	8600		B30043	-	---	---	---	850	950	---	---	---	---	---	---
K2500 CLASSIC	4x4	2000	Ext Cab	No	6.5 Box	7.4L V8	4500	6000	8600		B30043	-	---	---	---	650	800	850	---	---	---	---	---
K2500 CLASSIC	4x4	2000	Ext Cab	No	8.0 Box	5.7L V8	4500	6000	8600		B30043	-	---	---	---	450	450	450	---	950	---	---	---
K2500 CLASSIC	4x4	2000	All	No	Chassis	All	All	All	10000		B30043	-	---	---	---	?	?	?	---	?	?	?	---
K2500 SILV/SIERRA	4x4	2000	Reg Cab	No	8.0 Box	6.0L V8	4500	6000	8600	HB3/HB4 use B62224	B30042	6	---	---	---	600	650	650	---	700	---	---	---
K2500 SILV/SIERRA	4x4	2000	Ext Cab	No	6.5 Box	6.0L V8	4500	6000	8600		B30042	6	---	---	---	600	700	750	---	---	---	---	---
K2500 SILV/SIERRA	4x4	2000	Ext Cab	No	8.0 Box	6.0L V8	4500	6000	8600		B30042	6	---	---	---	550	600	700	---	---	---	---	---
K2500 SILV/SIERRA	4x4	2000	All	No	Chassis	All	All	All	10000		B30042	6	---	---	---	?	?	?	---	?	?	?	---
K3500 CLASSIC	4x4	2000	Reg Cab	No	8.0 Box	5.7L V8	4500	6084	9200	2B use B62220 or HB3/HB4 use B62223	B30043	-	---	---	---	350	350	350	---	450	900	---	---
K3500 CLASSIC	4x4	2000	Reg Cab	No	8.0 Box	6.5L D	4500	6084	9200		B30043	-	---	---	---	350	350	350	---	550	---	---	---
K3500 CLASSIC	4x4	2000	Reg Cab	No	8.0 Box	7.4L V8	4500	6084	9200		B30043	-	---	---	---	350	350	350	---	450	---	---	---

Notes:

1. Ballast amounts are based on a "Representative Vehicle," defined in the vehicle selection guide instructions, and must be modified for all other configurations for axle and GVWR compliance.
3. Requires bumper notching.
6. All New Style Only (2nd # in model # is 5 not 0) example: K15903. Refer to label in glove box for model number.
45. Ballast amounts for Model 760LT and 810PP are calculated on reduced plow weights produced after March 2006 (Serial Number 0603 or later). See the weight and dimensional charts at the end of this guide for reduced, current and old plow weights.

2005 to 1997 Chevy/GMC

													LT			HD			SPEEDWING™		POWER PLOW™		
													680LT	720LT	760LT[45]	760 HD	800 HD	860 HD	760SW	860SW	810PP[45]	8611LP	8611PP
												Blade Width	6'-8"	7'-2"	7'-6"	7'-6"	8'-0"	8'-6"	7'-6"	8'-6"	8'-0" 10'-0"	8'-6" 11'-0"	8'-6" 11'-0"
												Blade Assembly	B0680	B0720	B0761	B0760	B0800	B0860	B0765	B0865	B0810	B0863	B0861
												Joystick Control	B62073								B62109		
												Touchpad Control	B62142								B62141		
Model		Year	Body Style	DRW	Box Option	Engine Type	Min FGAWR	Min RGAWR	Min GVWR	Headlight Conversion Harness	POWER HITCH™ System Under-carriage	POWER HITCH™ System Notes	Ballast Guidelines, lbs (1)										
K3500 CLASSIC	4x4	2000	Reg Cab	Yes	8.0 Box	5.7L V8	4500	7500	10000	2B use B62220 or HB3/HB4 use B62223	B30043	-	---	---	---	---	---	400	---	800	---	---	---
K3500 CLASSIC	4x4	2000	Reg Cab	Yes	8.0 Box	6.5L D	4500	7500	10000		B30043	-	---	---	---	---	---	1000	---	---	---	---	---
K3500 CLASSIC	4x4	2000	Reg Cab	Yes	8.0 Box	7.4L V8	4500	7500	10000		B30043	-	---	---	---	---	---	850	---	---	---	---	---
K3500 CLASSIC	4x4	2000	Ext Cab	Yes	8.0 Box	5.7L V8	4500	7500	10000		B30043	-	---	---	---	---	---	750	---	---	---	---	---
K3500 CLASSIC	4x4	2000	All	No	Chassis	All	All	All	10000		B30043	-	---	---	---	?	?	?	---	?	?	?	---
K3500 CLASSIC	4x4	2000	All	Yes	Chassis	All	All	All	10000		B30043	-	---	---	---	---	---	?	---	?	?	?	---
K3500 CLASSIC (St Frame)	4x4	2000	All	Yes	Chassis	All	All	All	10000		B30043	-	---	---	---	---	---	?	---	?	?	?	---
C3500 CLASSIC	4x2	2000	Reg Cab	Yes	8.0 Box	5.7L V8	4100	7500	10001		B30071	-	---	---	---	---	---	900	---	---	---	---	---
C3500 CLASSIC	4x2	2000	All	Yes	Chassis	All	All	All	10001		B30071	-	---	---	---	---	---	?	---	?	?	?	---
C3500 CLASSIC (St Frame)	4x2	2000	All	Yes	Chassis	All	All	All	10001		B30071	-	---	---	---	---	---	?	---	?	?	?	---
C3500 HD	4x2	2000	All	Yes	Chassis	All	All	All	10001		B30071	-	---	---	---	---	---	?	---	?	?	?	---
TAHOE/YUKON 1500	4x4	1999	SU-2DR	No	---	5.7L V8	3925	3750	6250		B30080	-	---	---	150	---	---	---	250	---	---	---	---
SUBURBAN K1500	4x4	1999	SU-4DR	No	---	5.7L V8	3925	4800	8050		B30080	-	---	---	0	---	---	---	---	---	---	---	---
SUBURBAN K1500	4x4	1999	SU-4DR	No	---	5.7L V8	3925	4000	7300		B30080	-	---	---	0	---	---	---	---	---	---	---	---
SUBURBAN K2500	4x4	1999	SU-4DR	No	---	5.7L V8	4250	6000	8600		B30043	-	---	---	---	150	250	300	---	---	---	---	---
K1500 SILV/SIERRA	4x4	1999	Reg Cab	No	6.5 Box	4.3L V6	3925	3750	6100	HB3/HB4 use B62224	B30087	3,6	---	---	350	---	---	---	500	---	---	---	---
K1500 SILV/SIERRA	4x4	1999	Reg Cab	No	6.5 Box	4.3L V6	3600	3750	6100		B30087	3,6	---	---	350	---	---	---	---	---	---	---	---
K1500 SILV/SIERRA	4x4	1999	Reg Cab	No	6.5 Box	4.8L V8	3925	3750	6100		B30087	3,6	---	---	450	---	---	---	550	---	---	---	---
K1500 SILV/SIERRA	4x4	1999	Reg Cab	No	6.5 Box	4.8L V8	3600	3750	6100		B30087	3,6	---	---	650	---	---	---	---	---	---	---	---
K1500 SILV/SIERRA	4x4	1999	Reg Cab	No	6.5 Box	5.3L V8	3925	3750	6100		B30087	3,6	---	---	450	---	---	---	550	---	---	---	---
K1500 SILV/SIERRA	4x4	1999	Reg Cab	No	6.5 Box	5.3L V8	3600	3750	6100		B30087	3,6	---	---	650	---	---	---	---	---	---	---	---
K1500 SILV/SIERRA	4x4	1999	Reg Cab	No	8.0 Box	4.3L V6	3925	3750	6400		B30087	3,6	---	---	400	---	---	---	500	---	---	---	---
K1500 SILV/SIERRA	4x4	1999	Reg Cab	No	8.0 Box	4.3L V6	3600	3750	6400		B30087	3,6	---	---	650	---	---	---	---	---	---	---	---
K1500 SILV/SIERRA	4x4	1999	Reg Cab	No	8.0 Box	4.8L V8	3925	3750	6400		B30087	3,6	---	---	450	---	---	---	550	---	---	---	---
K1500 SILV/SIERRA	4x4	1999	Reg Cab	No	8.0 Box	5.3L V8	3925	3750	6400		B30087	3,6	---	---	450	---	---	---	550	---	---	---	---
K1500 SILV/SIERRA	4x4	1999	Ext Cab	No	6.5 Box	4.8L V8	3925	3750	6400		B30087	3,6	---	---	450	---	---	---	---	---	---	---	---
K1500 SILV/SIERRA	4x4	1999	Ext Cab	No	6.5 Box	5.3L V8	3925	3750	6400		B30087	3,6	---	---	450	---	---	---	---	---	---	---	---
K1500 SILV/SIERRA	4x4	1999	Ext Cab	No	8.0 Box	4.8L V8	3925	3750	6400		B30087	3,6	---	---	450	---	---	---	---	---	---	---	---
K1500 SILV/SIERRA	4x4	1999	Ext Cab	No	8.0 Box	5.3L V8	3925	3750	6400		B30087	3,6	---	---	450	---	---	---	---	---	---	---	---

Notes:

1. Ballast amounts are based on a "Representative Vehicle," defined in the vehicle selection guide instructions, and must be modified for all other configurations for axle and GVWR compliance.
3. Requires bumper notching.
6. All New Style Only (2nd # in model # is 5 not 0) example: K15903. Refer to label in glove box for model number.
45. Ballast amounts for Model 760LT and 810PP are calculated on reduced plow weights produced after March 2006 (Serial Number 0603 or later). See the weight and dimensional charts at the end of this guide for reduced, current and old plow weights.

2005 to 1997 Chevy/GMC

													POWER HITCH™										
													LT			HD			SPEEDWING™		POWER PLOW™		
													680LT	720LT	760LT[45]	760 HD	800 HD	860 HD	760SW	860SW	810PP[45]	8611LP	8611PP
												Blade Width	6'-8"	7'-2"	7'-6"	7'-6"	8'-0"	8'-6"	7'-6"	8'-6"	8'-0" 10'-0"	8'-6" 11'-0"	8'-6" 11'-0"
												Blade Assembly	B0680	B0720	B0761	B0760	B0800	B0860	B0765	B0865	B0810	B0863	B0861
												Joystick Control	B62073								B62109		
												Touchpad Control	B62142								B62141		
Model		Year	Body Style	DRW	Box Option	Engine Type	Min FGAWR	Min RGAWR	Min GVWR	Headlight Conversion Harness	POWER HITCH™ System Under-carriage	POWER HITCH™ System Notes	Ballast Guidelines, lbs (1)										
K2500 CLASSIC	4x4	1999	Ext Cab	No	6.5 Box	5.7L V8	4500	6000	8600	2B use B62220 or HB3/HB4 use B62223	B30043	-	---	---	---	600	600	650	---	850	---	---	---
K2500 CLASSIC	4x4	1999	All	No	Chassis	All	All	All	8501		B30043	-	---	---	---	?	?	?	---	?	?	?	---
K2500 SILV/SIERRA	4x4	1999	Reg Cab	No	8.0 Box	6.0L V8	4500	6000	8600	HB3/HB4 use B62224	B30043	-	---	---	---	550	550	550	---	650	---	---	---
K2500 SILV/SIERRA	4x4	1999	Ext Cab	No	8.0 Box	6.0L V8	4500	6000	8600		B30043	-	---	---	---	550	600	700	---	---	---	---	---
K2500 SILV/SIERRA	4x4	1999	All	No	Chassis	All	All	All	8501		B30043	-	---	---	---	?	?	?	---	?	?	?	---
K2500HD CLASSIC	4x4	1999	Reg Cab	No	8.0 Box	5.7L V8	4500	6000	8600	2B use B62220 or HB3/HB4 use B62223	B30043	-	---	---	---	500	550	550	---	600	---	---	---
K2500HD CLASSIC	4x4	1999	Reg Cab	No	8.0 Box	6.5L D	4500	6000	8600		B30043	-	---	---	---	1000	---	---	---	---	---	---	---
K2500HD CLASSIC	4x4	1999	Reg Cab	No	8.0 Box	7.4L V8	4500	6000	8600		B30043	-	---	---	---	550	700	750	---	---	---	---	---
K2500HD CLASSIC	4x4	1999	Ext Cab	No	8.0 Box	5.7L V8	4500	6000	8600		B30043	-	---	---	---	650	750	850	---	---	---	---	---
K3500 CLASSIC	4x4	1999	Reg Cab	No	8.0 Box	5.7L V8	4500	6084	9200		B30043	-	---	---	---	350	400	400	---	450	---	---	---
K3500 CLASSIC	4x4	1999	Reg Cab	No	8.0 Box	6.5L D	4500	6084	9200		B30043	-	---	---	---	850	950	---	---	---	---	---	---
K3500 CLASSIC	4x4	1999	Reg Cab	No	8.0 Box	7.4L V8	4500	6084	9200		B30043	-	---	---	---	500	600	650	---	---	---	---	---
K3500 CLASSIC	4x4	1999	Reg Cab	Yes	8.0 Box	5.7L V8	4500	7500	10000		B30043	-	---	---	---	---	---	200	---	300	---	---	---
K3500 CLASSIC	4x4	1999	Reg Cab	Yes	8.0 Box	7.4L V8	4500	7500	10000		B30043	-	---	---	---	---	---	800	---	---	---	---	---
K3500 CLASSIC	4x4	1999	Ext Cab	No	8.0 Box	5.7L V8	4500	7500	10000		B30043	-	---	---	---	850	1000	---	---	---	---	---	---
K3500 CLASSIC	4x4	1999	Crew Cab	No	8.0 Box	5.7L V8	4500	6084	9200		B30043	-	---	---	---	1000	---	---	---	---	---	---	---
K3500 CLASSIC	4x4	1999	All	No	Chassis	All	All	All	10000		B30043	-	---	---	---	?	?	?	---	?	?	?	---
K3500 CLASSIC	4x4	1999	All	Yes	Chassis	All	All	All	8501		B30043	-	---	---	---	---	---	?	---	?	?	?	---
C3500 CLASSIC	4x2	1999	All	Yes	Chassis	All	All	All	10001		B30071	-	---	---	---	---	---	?	---	?	?	?	---
C3500 HD	4x2	1999	All	Yes	Chassis	All	All	All	15000	HB3/HB4 use B62223	B30071	-	---	---	---	---	---	?	---	?	?	?	---
TAHOE/YUKON 1500	4x4	1998	SU-2DR	No	---	5.7L V8	3925	3750	6250	2B use B62220 or HB3/HB4 use B62223	B30080	-	---	---	150	---	---	---	250	---	---	---	---
SUBURBAN K1500	4x4	1998	SU-4DR	No	---	5.7L V8	3925	4800	8050		B30080	-	---	---	0	---	---	---	---	---	---	---	---
SUBURBAN K1500	4x4	1998	SU-4DR	No	---	5.7L V8	3925	4000	7300		B30080	-	---	---	0	---	---	---	---	---	---	---	---
SUBURBAN K2500	4x4	1998	SU-4DR	No	---	5.7L V8	4250	6000	8600		B30043	-	---	---	---	150	250	300	---	---	---	---	---
K1500 CLASSIC	4x4	1998	Reg Cab	No	6.5 Box	4.3L V6	3925	3750	6100		B30080	-	---	---	450	---	---	---	550	---	---	---	---
K1500 CLASSIC	4x4	1998	Reg Cab	No	6.5 Box	5.0L V8	3925	3750	6100		B30080	-	---	---	500	---	---	---	---	---	---	---	---
K1500 CLASSIC	4x4	1998	Reg Cab	No	6.5 Box	5.7L V8	3925	3750	6100		B30080	-	---	---	500	---	---	---	---	---	---	---	---
K1500 CLASSIC	4x4	1998	Reg Cab	No	8.0 Box	4.3L V6	3925	3750	6100		B30080	-	---	---	500	---	---	---	---	---	---	---	---
K1500 CLASSIC	4x4	1998	Reg Cab	No	8.0 Box	5.7L V8	3925	3750	6100		B30080	-	---	---	500	---	---	---	---	---	---	---	---

Notes:

1. Ballast amounts are based on a "Representative Vehicle," defined in the vehicle selection guide instructions, and must be modified for all other configurations for axle and GVWR compliance.
45. Ballast amounts for Model 760LT and 810PP are calculated on reduced plow weights produced after March 2006 (Serial Number 0603 or later). See the weight and dimensional charts at the end of this guide for reduced, current and old plow weights.

2005 to 1997 Chevy/GMC

													LT			HD			SPEEDWING™		POWER PLOW™		
													680LT	720LT	760LT[45]	760 HD	800 HD	860 HD	760SW	860SW	810PP[45]	8611LP	8611PP
												Blade Width	6'-8"	7'-2"	7'-6"	7'-6"	8'-0"	8'-6"	7'-6"	8'-6"	8'-0" 10'-0"	8'-6" 11'-0"	8'-6" 11'-0"
												Blade Assembly	B0680	B0720	B0761	B0760	B0800	B0860	B0765	B0865	B0810	B0863	B0861
												Joystick Control	B62073								B62109		
												Touchpad Control	B62142								B62141		
Model		Year	Body Style	DRW	Box Option	Engine Type	Min FGAWR	Min RGAWR	Min GVWR	Headlight Conversion Harness	POWER HITCH™ System Under-carriage	POWER HITCH™ System Notes	Ballast Guidelines, lbs (1)										
K1500 CLASSIC	4x4	1998	Ext Cab	No	6.5 Box	4.3L V6	3925	3750	6800	2B use B62220 or HB3/HB4 use B62223	B30080	-	---	---	350	---	---	---	550	---	---	---	---
K1500 CLASSIC	4x4	1998	Ext Cab	No	6.5 Box	4.3L V6	3925	3750	6600		B30080	-	---	---	350	---	---	---	550	---	---	---	---
K1500 CLASSIC	4x4	1998	Ext Cab	No	6.5 Box	4.3L V6	3925	3750	6200		B30080	-	---	---	400	---	---	---	---	---	---	---	---
K1500 CLASSIC	4x4	1998	Ext Cab	No	6.5 Box	5.0L V8	3925	3750	6800		B30080	-	---	---	400	---	---	---	---	---	---	---	---
K1500 CLASSIC	4x4	1998	Ext Cab	No	6.5 Box	5.0L V8	3925	3750	6600		B30080	-	---	---	400	---	---	---	---	---	---	---	---
K1500 CLASSIC	4x4	1998	Ext Cab	No	6.5 Box	5.7L V8	3925	3750	6800		B30080	-	---	---	400	---	---	---	---	---	---	---	---
K1500 CLASSIC	4x4	1998	Ext Cab	No	6.5 Box	5.7L V8	3925	3750	6600		B30080	-	---	---	400	---	---	---	---	---	---	---	---
K1500 W/T CLASSIC	4x4	1998	Reg Cab	No	6.5 Box	4.3L V6	3925	3750	6100		B30080	-	---	---	550	---	---	---	650	---	---	---	---
K1500 W/T CLASSIC	4x4	1998	Reg Cab	No	8.0 Box	4.3L V6	3925	3750	6100		B30080	-	---	---	550	---	---	---	---	---	---	---	---
K2500 CLASSIC	4x4	1998	Ext Cab	No	6.5 Box	5.7L V8	4500	6000	8600		B30043	-	---	---	---	500	550	550	---	600	---	---	---
K2500 CLASSIC	4x4	1998	All	No	Chassis	All	All	All	8501		B30043	-	---	---	---	?	?	?	---	?	?	?	---
K2500HD CLASSIC	4x4	1998	Reg Cab	No	8.0 Box	5.7L V8	4500	6000	8600		B30043	-	---	---	---	600	600	600	---	700	---	---	---
K2500HD CLASSIC	4x4	1998	Reg Cab	No	8.0 Box	5.7L V8	4250	6000	8600		B30043	-	---	---	---	900	---	---	---	---	---	---	---
K2500HD CLASSIC	4x4	1998	Reg Cab	No	8.0 Box	6.5L D	4500	6000	8600		B30043	-	---	---	---	950	---	---	---	---	---	---	---
K2500HD CLASSIC	4x4	1998	Reg Cab	No	8.0 Box	7.4L V8	4500	6000	8600		B30043	-	---	---	---	950	---	---	---	---	---	---	---
K2500HD CLASSIC	4x4	1998	Ext Cab	No	8.0 Box	5.7L V8	4500	6000	8600		B30043	-	---	---	---	450	500	500	---	950	---	---	---
K3500 CLASSIC	4x4	1998	Reg Cab	No	8.0 Box	5.7L V8	4500	6084	9200		B30043	-	---	---	---	450	500	500	---	650	---	---	---
K3500 CLASSIC	4x4	1998	Reg Cab	No	8.0 Box	7.4L V8	4500	6084	9200		B30043	-	---	---	---	950	---	---	---	---	---	---	---
K3500 CLASSIC	4x4	1998	Reg Cab	Yes	8.0 Box	5.7L V8	4500	7500	10000		B30043	-	---	---	---	---	---	450	---	850	---	---	---
K3500 CLASSIC	4x4	1998	Ext Cab	Yes	8.0 Box	5.7L V8	4500	7500	10000		B30043	-	---	---	---	---	---	600	---	---	---	---	---
K3500 CLASSIC	4x4	1998	All	No	Chassis	All	All	All	8501		B30043	-	---	---	---	?	?	?	---	?	?	?	---
K3500 CLASSIC	4x4	1998	All	Yes	Chassis	All	All	All	10000		B30043	-	---	---	---	---	---	?	---	?	?	?	---
K3500 CLASSIC (St Frame)	4x4	1998	All	Yes	Chassis	All	All	All	10000		B30043	-	---	---	---	---	---	?	---	?	?	?	---
C3500 CLASSIC	4x2	1998	All	Yes	Chassis	All	All	All	10001		B30071	-	---	---	---	---	---	?	---	?	?	?	---
C3500 CLASSIC (St Frame)	4x2	1998	All	Yes	Chassis	All	All	All	10001		B30071	-	---	---	---	---	---	?	---	?	?	?	---
C3500 HD	4x2	1998	All	Yes	Chassis	All	All	All	10001		B30071	-	---	---	---	---	---	?	---	?	?	?	---
TAHOE/YUKON 1500	4x4	1997	SU-2DR	No	---	5.7L V8	3925	3750	6250		B30080	-	---	---	50	---	---	---	200	---	---	---	---
SUBURBAN K1500	4x4	1997	SU-4DR	No	---	5.7L V8	3925	4800	8050		B30080	-	---	---	0	---	---	---	150	---	---	---	---
SUBURBAN K1500	4x4	1997	SU-4DR	No	---	5.7L V8	3925	4000	7300		B30080	-	---	---	0	---	---	---	150	---	---	---	---
SUBURBAN K2500	4x4	1997	SU-4DR	No	---	5.7L V8	4250	6000	8600		B30043	-	---	---	---	0	0	0	---	---	---	---	---

Notes:

1. Ballast amounts are based on a "Representative Vehicle," defined in the vehicle selection guide instructions, and must be modified for all other configurations for axle and GVWR compliance.

45. Ballast amounts for Model 760LT and 810PP are calculated on reduced plow weights produced after March 2006 (Serial Number 0603 or later). See the weight and dimensional charts at the end of this guide for reduced, current and old plow weights.

2005 to 1997 Chevy/GMC

													LT			HD			SPEEDWING™		POWER PLOW™		
													680LT	720LT	760LT[45]	760 HD	800 HD	860 HD	760SW	860SW	810PP[45]	8611LP	8611PP
												Blade Width	6'-8"	7'-2"	7'-6"	7'-6"	8'-0"	8'-6"	7'-6"	8'-6"	8'-0" 10'-0"	8'-6" 11'-0"	8'-6" 11'-0"
												Blade Assembly	B0680	B0720	B0761	B0760	B0800	B0860	B0765	B0865	B0810	B0863	B0861
												Joystick Control	B62073								B62109		
												Touchpad Control	B62142								B62141		
Model		Year	Body Style	DRW	Box Option	Engine Type	Min FGAWR	Min RGAWR	Min GVWR	Headlight Conversion Harness	POWER HITCH™ System Under-carriage	POWER HITCH™ System Notes	Ballast Guidelines, lbs (1)										
K1500 CLASSIC	4x4	1997	Reg Cab	No	6.5 Box	4.3L V6	3925	3750	6100	2B use B62220 or HB3/HB4 use B62223	B30080	-	---	---	400	---	---	---	500	---	---	---	---
K1500 CLASSIC	4x4	1997	Reg Cab	No	6.5 Box	4.3L V6	3600	3750	6100		B30080	-	---	---	450	---	---	---	---	---	---	---	---
K1500 CLASSIC	4x4	1997	Reg Cab	No	6.5 Box	5.0L V8	3925	3750	6100		B30080	-	---	---	400	---	---	---	---	---	---	---	---
K1500 CLASSIC	4x4	1997	Reg Cab	No	6.5 Box	5.7L V8	3925	3750	6100		B30080	-	---	---	450	---	---	---	---	---	---	---	---
K1500 CLASSIC	4x4	1997	Reg Cab	No	8.0 Box	4.3L V6	3925	3750	6100		B30080	-	---	---	350	---	---	---	450	---	---	---	---
K1500 CLASSIC	4x4	1997	Reg Cab	No	8.0 Box	5.0L V8	3925	3750	6100		B30080	-	---	---	400	---	---	---	---	---	---	---	---
K1500 CLASSIC	4x4	1997	Reg Cab	No	8.0 Box	5.7L V8	3925	3750	6100		B30080	-	---	---	400	---	---	---	---	---	---	---	---
K1500 CLASSIC	4x4	1997	Ext Cab	No	6.5 Box	4.3L V6	3925	3750	6800		B30080	-	---	---	350	---	---	---	550	---	---	---	---
K1500 CLASSIC	4x4	1997	Ext Cab	No	6.5 Box	4.3L V6	3925	3750	6600		B30080	-	---	---	350	---	---	---	550	---	---	---	---
K1500 CLASSIC	4x4	1997	Ext Cab	No	6.5 Box	4.3L V6	3925	3750	6200		B30080	-	---	---	400	---	---	---	---	---	---	---	---
K1500 CLASSIC	4x4	1997	Ext Cab	No	6.5 Box	5.0L V8	3925	3750	6800		B30080	-	---	---	350	---	---	---	---	---	---	---	---
K1500 CLASSIC	4x4	1997	Ext Cab	No	6.5 Box	5.0L V8	3925	3750	6600		B30080	-	---	---	350	---	---	---	---	---	---	---	---
K1500 CLASSIC	4x4	1997	Ext Cab	No	6.5 Box	5.7L V8	3925	3750	6800		B30080	-	---	---	450	---	---	---	---	---	---	---	---
K1500 CLASSIC	4x4	1997	Ext Cab	No	6.5 Box	5.7L V8	3925	3750	6600		B30080	-	---	---	450	---	---	---	---	---	---	---	---
K1500 CLASSIC	4x4	1997	Ext Cab	No	8.0 Box	5.0L V8	3925	3750	6800		B30080	-	---	---	550	---	---	---	---	---	---	---	---
K1500 CLASSIC	4x4	1997	Ext Cab	No	8.0 Box	5.0L V8	3925	3750	6600		B30080	-	---	---	550	---	---	---	---	---	---	---	---
K1500 W/T CLASSIC	4x4	1997	Reg Cab	No	6.5 Box	4.3L V6	3925	3750	6100		B30080	-	---	---	400	---	---	---	500	---	---	---	---
K1500 W/T CLASSIC	4x4	1997	Reg Cab	No	6.5 Box	4.3L V6	3600	3750	6100		B30080	-	---	---	450	---	---	---	---	---	---	---	---
K1500 W/T CLASSIC	4x4	1997	Reg Cab	No	8.0 Box	4.3L V6	3925	3750	6100		B30080	-	---	---	450	---	---	---	---	---	---	---	---
K2500 CLASSIC	4x4	1997	Ext Cab	No	6.5 Box	5.7L V8	4250	6000	8600		B30043	-	---	---	---	850	950	---	---	---	---	---	---
K2500HD CLASSIC	4x4	1997	Reg Cab	No	8.0 Box	5.7L V8	4250	6000	8600		B30043	-	---	---	---	450	500	550	---	950	---	---	---
K3500 CLASSIC	4x4	1997	Reg Cab	No	8.0 Box	5.7L V8	4250	6084	9200		B30043	-	---	---	---	300	450	500	---	900	---	---	---
K3500 CLASSIC	4x4	1997	Reg Cab	Yes	8.0 Box	5.7L V8	4250	7500	10000		B30043	-	---	---	---	---	---	700	---	---	---	---	---
K3500 CLASSIC	4x4	1997	All	Yes	Chassis	All	All	All	8501		B30043	-	---	---	---	---	---	?	---	?	?	?	---
C3500 CLASSIC	4x2	1997	All	Yes	Chassis	All	All	All	10001		B30071	-	---	---	---	---	---	?	---	?	?	?	---
C3500 HD	4x2	1997	All	Yes	Chassis	All	All	All	10001		B30071	-	---	---	---	---	---	?	---	?	?	?	---

Notes:

1. Ballast amounts are based on a "Representative Vehicle," defined in the vehicle selection guide instructions, and must be modified for all other configurations for axle and GVWR compliance.
45. Ballast amounts for Model 760LT and 810PP are calculated on reduced plow weights produced after March 2006 (Serial Number 0603 or later). See the weight and dimensional charts at the end of this guide for reduced, current and old plow weights.

2005 to 1997 Dodge

													LT			HD			SPEEDWING™		POWER PLOW™		
													680LT	720LT	760LT[45]	760 HD	800 HD	860 HD	760SW	860SW	810PP[45]	8611LP	8611PP
												Blade Width	6'-8"	7'-2"	7'-6"	7'-6"	8'-0"	8'-6"	7'-6"	8'-6"	8'-0" 10'-0"	8'-6" 11'-0"	8'-6" 11'-0"
												Blade Assembly	B0680	B0720	B0761	B0760	B0800	B0860	B0765	B0865	B0810	B0863	B0861
												Joystick Control	B62073								B62109		
												Touchpad Control	B62142								B62141		
Model		Year	Body Style	DRW	Box Option	Engine Type	Min FGAWR	Min RGAWR	Min GVWR	Headlight Conversion Harness	POWER HITCH™ System Under-carriage	POWER HITCH™ System Notes	Ballast Guidelines, lbs (1)										
DURANGO ST	4x4	2005	SU-4DR	No	---	3.7L V6	3600	3900	6600		B32188	-	0	0	---	---	---	---	---	---	---	---	---
DURANGO SLT	4x4	2005	SU-4DR	No	---	4.7L V8	3600	3900	6600		B32188	-	0	0	---	---	---	---	---	---	---	---	---
DURANGO SLT	4x4	2005	SU-4DR	No	---	5.7L V8	3600	3900	6600		B32188	-	0	0	---	---	---	---	---	---	---	---	---
DURANGO LIMITED	4x4	2005	SU-4DR	No	---	4.7L V8	3600	3900	6600		B32188	-	0	0	---	---	---	---	---	---	---	---	---
DURANGO LIMITED	4x4	2005	SU-4DR	No	---	5.7L V8	3600	3900	6600		B32188	-	0	0	---	---	---	---	---	---	---	---	---
DURANGO SLT +50/50 rear seat	4x4	2005	SU-4DR	No	---	4.7L V8	3600	3900	6600		B32188	-	0	0	---	---	---	---	---	---	---	---	---
DURANGO SLT +50/50 rear seat	4x4	2005	SU-4DR	No	---	5.7L V8	3600	3900	6600		B32188	-	0	0	---	---	---	---	---	---	---	---	---
DAKOTA ST	4x4	2005	Club Cab	No	6.5 Box	3.7L V6	3600	3806	6010		B32221	-	150	200	---	---	---	---	---	---	---	---	---
DAKOTA ST	4x4	2005	Club Cab	No	6.5 Box	4.7L V8	3600	3806	6010		B32221	-	200	200	---	---	---	---	---	---	---	---	---
DAKOTA ST	4x4	2005	Quad Cab	No	5.3 Box	3.7L V6	3600	3806	6010		B32221	-	100	100	---	---	---	---	---	---	---	---	---
DAKOTA ST	4x4	2005	Quad Cab	No	5.3 Box	4.7L V8	3600	3806	6010	H13 use n/a	B32221	-	100	150	---	---	---	---	---	---	---	---	---
DAKOTA SLT	4x4	2005	Club Cab	No	6.5 Box	3.7L V6	3600	3600	6010		B32221	-	150	150	---	---	---	---	---	---	---	---	---
DAKOTA SLT	4x4	2005	Club Cab	No	6.5 Box	4.7L V8	3600	3600	6010		B32221	-	200	200	---	---	---	---	---	---	---	---	---
DAKOTA SLT	4x4	2005	Quad Cab	No	5.3 Box	3.7L V6	3600	3600	6010		B32221	-	100	100	---	---	---	---	---	---	---	---	---
DAKOTA SLT	4x4	2005	Quad Cab	No	5.3 Box	4.7L V8	3600	3600	6010		B32221	-	100	100	---	---	---	---	---	---	---	---	---
DAKOTA SLT	4x4	2005	Quad Cab	No	5.3 Box	4.7L V8 HO	3600	3600	6010		B32221	-	100	150	---	---	---	---	---	---	---	---	---
DAKOTA LARAMIE	4x4	2005	Club Cab	No	6.5 Box	3.7L V6	3600	3600	6010		B32221	-	150	150	---	---	---	---	---	---	---	---	---
DAKOTA LARAMIE	4x4	2005	Club Cab	No	6.5 Box	4.7L V8	3600	3600	6010		B32221	-	150	200	---	---	---	---	---	---	---	---	---
DAKOTA LARAMIE	4x4	2005	Quad Cab	No	5.3 Box	3.7L V6	3600	3600	6010		B32221	-	100	100	---	---	---	---	---	---	---	---	---
DAKOTA LARAMIE	4x4	2005	Quad Cab	No	5.3 Box	4.7L V8	3600	3600	6010		B32221	-	100	100	---	---	---	---	---	---	---	---	---
DAKOTA LARAMIE	4x4	2005	Quad Cab	No	5.3 Box	4.7L V8 HO	3600	3600	6010		B32221	-	100	100	---	---	---	---	---	---	---	---	---
RAM 1500 ST	4x4	2005	Reg Cab	No	6.5 Box	5.7L V8	3900	3900	6350		B32048	-	---	---	450	---	---	---	---	---	---	---	---
RAM 2500	4x4	2005	All	No	Chassis	All	All	All	8501		B32057	-	---	---	---	?	?	?	---	?	?	?	---
RAM 2500 ST	4x4	2005	Reg Cab	No	8.0 Box	5.7L V8	5200	6000	8650		B32057	-	---	---	---	450	500	500	---	550	700	850	---
RAM 2500 ST	4x4	2005	Quad Cab	No	6.5 Box	5.7L V8	5200	6000	8800	HB5 use B62222	B32057	-	---	---	---	400	400	400	---	500	650	950	---
RAM 2500 ST	4x4	2005	Quad Cab	No	8.0 Box	5.7L V8	5200	6000	8800		B32057	-	---	---	---	400	450	450	---	500	650	---	---
RAM 2500 SLT	4x4	2005	Reg Cab	No	8.0 Box	5.7L V8	5200	6010	8650		B32057	-	---	---	---	450	450	450	---	550	700	800	---
RAM 2500 SLT	4x4	2005	Quad Cab	No	6.5 Box	5.7L V8	5200	6010	8800		B32057	-	---	---	---	350	400	400	---	450	650	950	---
RAM 2500 SLT	4x4	2005	Quad Cab	No	8.0 Box	5.7L V8	5200	6010	8800		B32057	-	---	---	---	400	400	400	---	450	600	---	---

Notes:

1. Ballast amounts are based on a "Representative Vehicle," defined in the vehicle selection guide instructions, and must be modified for all other configurations for axle and GVWR compliance.
45. Ballast amounts for Model 760LT and 810PP are calculated on reduced plow weights produced after March 2006 (Serial Number 0603 or later). See the weight and dimensional charts at the end of this guide for reduced, current and old plow weights.

2005 to 1997 Dodge

													LT			HD			SPEEDWING™		POWER PLOW™		
													680LT	720LT	760LT[45]	760 HD	800 HD	860 HD	760SW	860SW	810PP[45]	8611LP	8611PP
												Blade Width	6'-8"	7'-2"	7'-6"	7'-6"	8'-0"	8'-6"	7'-6"	8'-6"	8'-0" 10'-0"	8'-6" 11'-0"	8'-6" 11'-0"
												Blade Assembly	B0680	B0720	B0761	B0760	B0800	B0860	B0765	B0865	B0810	B0863	B0861
												Joystick Control	B62073								B62109		
												Touchpad Control	B62142								B62141		
Model		Year	Body Style	DRW	Box Option	Engine Type	Min FGAWR	Min RGAWR	Min GVWR	Headlight Conversion Harness	POWER HITCH™ System Under-carriage	POWER HITCH™ System Notes	Ballast Guidelines, lbs (1)										
RAM 3500	4x4	2005	All	Yes	Chassis	All	All	All	8501	HB5 use B62222	B32057	-	---	---	---	---	---	?	---	?	?	?	---
RAM 3500	4x2	2005	All	Yes	Chassis	All	All	All	10001		B32057	-	---	---	---	---	---	?	---	?	?	?	---
RAM 3500 ST	4x4	2005	Reg Cab	Yes	8.0 Box	5.7L V8	5200	9350	11500		B32057	-	---	---	---	---	---	250	---	300	450	---	---
RAM 3500 ST	4x4	2005	Quad Cab	Yes	8.0 Box	5.7L V8	5200	9350	11500		B32057	-	---	---	---	---	---	150	---	250	---	---	---
RAM 3500 SLT	4x4	2005	Reg Cab	Yes	8.0 Box	5.7L V8	5200	9350	11500		B32057	-	---	---	---	---	---	250	---	300	550	---	---
RAM 3500 SLT	4x4	2005	Quad Cab	Yes	8.0 Box	5.7L V8	5200	9350	11500		B32057	-	---	---	---	---	---	150	---	250	---	---	---
DURANGO ST	4x4	2004	SU-4DR	No	---	4.7L V8	3600	3900	6600	H13 use n/a	B32188	-	0	0	---	---	---	---	---	---	---	---	---
DURANGO SLT	4x4	2004	SU-4DR	No	---	4.7L V8	3600	3900	6600		B32188	-	0	0	---	---	---	---	---	---	---	---	---
DURANGO SLT	4x4	2004	SU-4DR	No	---	5.7L V8	3600	3900	6600		B32188	-	0	0	---	---	---	---	---	---	---	---	---
DURANGO LIMITED	4x4	2004	SU-4DR	No	---	4.7L V8	3600	3900	6600		B32188	-	0	0	---	---	---	---	---	---	---	---	---
DURANGO LIMITED	4x4	2004	SU-4DR	No	---	5.7L V8	3600	3900	6600		B32188	-	0	0	---	---	---	---	---	---	---	---	---
DAKOTA	4x4	2004	Reg Cab	No	6.5 Box	3.7L V6	3600	3806	5900	HB5 use B62222	B32214	-	150	200	---	---	---	---	---	---	---	---	---
DAKOTA	4x4	2004	Reg Cab	No	6.5 Box	3.7L V6	3600	3806	5400		B32214	-	200	200	---	---	---	---	---	---	---	---	---
DAKOTA	4x4	2004	Club Cab	No	6.5 Box	3.7L V6	3600	3806	6010		B32214	-	150	200	---	---	---	---	---	---	---	---	---
DAKOTA SLT	4x4	2004	Reg Cab	No	6.5 Box	3.7L V6	3600	3806	5900		B32214	-	150	200	---	---	---	---	---	---	---	---	---
DAKOTA SLT	4x4	2004	Reg Cab	No	6.5 Box	3.7L V6	3600	3806	5400		B32214	-	200	200	---	---	---	---	---	---	---	---	---
DAKOTA SLT	4x4	2004	Reg Cab	No	6.5 Box	4.7L V8	3600	3806	5900		B32214	-	200	200	---	---	---	---	---	---	---	---	---
DAKOTA SLT	4x4	2004	Reg Cab	No	6.5 Box	4.7L V8	3600	3806	5400		B32214	-	200	200	---	---	---	---	---	---	---	---	---
DAKOTA SLT	4x4	2004	Club Cab	No	6.5 Box	3.7L V6	3600	3806	6010		B32214	-	200	200	---	---	---	---	---	---	---	---	---
DAKOTA SLT	4x4	2004	Club Cab	No	6.5 Box	4.7L V8	3600	3806	6010		B32214	-	200	200	---	---	---	---	---	---	---	---	---
DAKOTA SLT	4x4	2004	Quad Cab	No	5.3 Box	3.7L V6	3600	3806	6010		B32214	-	50	100	---	---	---	---	---	---	---	---	---
DAKOTA SLT	4x4	2004	Quad Cab	No	5.3 Box	4.7L V8	3600	3806	6010		B32214	-	100	100	---	---	---	---	---	---	---	---	---
DAKOTA SPORT	4x4	2004	Reg Cab	No	6.5 Box	3.7L V6	3600	3806	5900	HB5 use B62226	B32214	-	200	200	---	---	---	---	---	---	---	---	---
DAKOTA SPORT	4x4	2004	Reg Cab	No	6.5 Box	3.7L V6	3600	3806	5400		B32214	-	200	200	---	---	---	---	---	---	---	---	---
DAKOTA SPORT	4x4	2004	Reg Cab	No	6.5 Box	4.7L V8	3600	3806	5400		B32214	-	200	200	---	---	---	---	---	---	---	---	---
DAKOTA SPORT	4x4	2004	Club Cab	No	6.5 Box	3.7L V6	3600	3806	6010		B32214	-	200	200	---	---	---	---	---	---	---	---	---
DAKOTA SPORT	4x4	2004	Club Cab	No	6.5 Box	4.7L V8	3600	3806	6010		B32214	-	200	200	---	---	---	---	---	---	---	---	---
DAKOTA SPORT	4x4	2004	Quad Cab	No	5.3 Box	3.7L V6	3600	3806	6010		B32214	-	50	100	---	---	---	---	---	---	---	---	---
DAKOTA SPORT	4x4	2004	Quad Cab	No	5.3 Box	4.7L V8	3600	3806	6010		B32214	-	100	100	---	---	---	---	---	---	---	---	---

Notes:

1. Ballast amounts are based on a "Representative Vehicle," defined in the vehicle selection guide instructions, and must be modified for all other configurations for axle and GVWR compliance.
45. Ballast amounts for Model 760LT and 810PP are calculated on reduced plow weights produced after March 2006 (Serial Number 0603 or later). See the weight and dimensional charts at the end of this guide for reduced, current and old plow weights.

2005 to 1997 Dodge

													LT			HD			SPEEDWING™		POWER PLOW™		
													680LT	720LT	760LT[45]	760 HD	800 HD	860 HD	760SW	860SW	810PP[45]	8611LP	8611PP
												Blade Width	6'-8"	7'-2"	7'-6"	7'-6"	8'-0"	8'-6"	7'-6"	8'-6"	8'-0" 10'-0"	8'-6" 11'-0"	8'-6" 11'-0"
												Blade Assembly	B0680	B0720	B0761	B0760	B0800	B0860	B0765	B0865	B0810	B0863	B0861
												Joystick Control	B62073								B62109		
												Touchpad Control	B62142								B62141		
Model		Year	Body Style	DRW	Box Option	Engine Type	Min FGAWR	Min RGAWR	Min GVWR	Headlight Conversion Harness	POWER HITCH™ System Under-carriage	POWER HITCH™ System Notes	Ballast Guidelines, lbs (1)										
RAM 1500	4x4	2004	Reg Cab	No	6.5 Box	4.7L FFV	3900	3900	6350		B32048	-	---	---	350	---	---	---	---	---	---	---	---
RAM 1500	4x4	2004	Reg Cab	No	6.5 Box	4.7L OHC	3900	3900	6350		B32048	-	---	---	350	---	---	---	---	---	---	---	---
RAM 1500	4x4	2004	Reg Cab	No	6.5 Box	5.7L V8	3900	3900	6350		B32048	-	---	---	300	---	---	---	---	---	---	---	---
RAM 1500 SLT	4x4	2004	Reg Cab	No	6.5 Box	4.7L V8	3900	3900	6350		B32048	-	---	---	400	---	---	---	---	---	---	---	---
RAM 1500 SLT	4x4	2004	Reg Cab	No	6.5 Box	5.7L V8	3900	3900	6350		B32048	-	---	---	350	---	---	---	---	---	---	---	---
RAM 2500	4x4	2004	Reg Cab	No	8.0 Box	5.7L V8	5200	6000	8650		B32057	-	---	---	---	450	450	500	---	550	700	800	---
RAM 2500	4x4	2004	Quad Cab	No	6.5 Box	5.7L V8	5200	6000	8800		B32057	-	---	---	---	350	400	400	---	450	600	800	---
RAM 2500	4x4	2004	Quad Cab	No	8.0 Box	5.7L V8	5200	6000	8800		B32057	-	---	---	---	400	400	450	---	500	650	---	---
RAM 2500	4x4	2004	All	No	Chassis	All	All	All	8501		B32057	-	---	---	---	?	?	?	---	?	?	?	---
RAM 2500 SLT	4x4	2004	Reg Cab	No	8.0 Box	5.7L V8	5200	6000	8650		B32057	-	---	---	---	450	450	450	---	500	700	800	---
RAM 2500 SLT	4x4	2004	Quad Cab	No	6.5 Box	5.7L V8	5200	6000	8800		B32057	-	---	---	---	350	350	400	---	450	600	800	---
RAM 2500 SLT	4x4	2004	Quad Cab	No	8.0 Box	5.7L V8	5200	6000	8800		B32057	-	---	---	---	350	400	400	---	450	600	---	---
RAM 3500	4x4	2004	Reg Cab	Yes	8.0 Box	5.7L V8	5200	9350	11500		B32057	-	---	---	---	---	---	200	---	300	450	1000	---
RAM 3500	4x4	2004	Quad Cab	Yes	8.0 Box	5.7L V8	5200	9350	11500		B32057	-	---	---	---	---	---	150	---	200	---	---	---
RAM 3500	4x4	2004	All	Yes	Chassis	All	All	All	8501		B32057	-	---	---	---	---	---	?	---	?	?	?	---
RAM 3500	4x2	2004	All	Yes	Chassis	All	All	All	10001	HB5 use B62222	B32057	-	---	---	---	---	---	?	---	?	?	?	---
RAM 3500 SLT	4x4	2004	Reg Cab	Yes	8.0 Box	5.7L V8	5200	9350	11500		B32057	-	---	---	---	---	---	200	---	300	450	---	---
RAM 3500 SLT	4x4	2004	Quad Cab	Yes	8.0 Box	5.7L V8	5200	9350	11500		B32057	-	---	---	---	---	---	150	---	200	---	---	---
DAKOTA	4x4	2003	Reg Cab	No	6.5 Box	3.9L V6	3600	3850	5900		B32214	-	250	250	---	---	---	---	---	---	---	---	---
DAKOTA	4x4	2003	Reg Cab	No	6.5 Box	3.9L V6	3600	3850	5400		B32214	-	250	250	---	---	---	---	---	---	---	---	---
DAKOTA	4x4	2003	Club Cab	No	6.5 Box	3.9L V6	3600	3850	6010		B32214	-	250	250	---	---	---	---	---	---	---	---	---
DAKOTA SLT	4x4	2003	Reg Cab	No	6.5 Box	3.9L V6	3600	3850	5900		B32214	-	200	200	---	---	---	---	---	---	---	---	---
DAKOTA SLT	4x4	2003	Reg Cab	No	6.5 Box	3.9L V6	3600	3850	5400		B32214	-	200	200	---	---	---	---	---	---	---	---	---
DAKOTA SLT	4x4	2003	Reg Cab	No	6.5 Box	4.7L V8	3600	3850	5900		B32214	-	200	200	---	---	---	---	---	---	---	---	---
DAKOTA SLT	4x4	2003	Reg Cab	No	6.5 Box	4.7L V8	3600	3850	5400		B32214	-	200	200	---	---	---	---	---	---	---	---	---
DAKOTA SLT	4x4	2003	Club Cab	No	6.5 Box	3.9L V6	3600	3850	6010		B32214	-	250	250	---	---	---	---	---	---	---	---	---
DAKOTA SLT	4x4	2003	Club Cab	No	6.5 Box	4.7L V8	3600	3850	6010		B32214	-	250	250	---	---	---	---	---	---	---	---	---
DAKOTA SLT	4x4	2003	Club Cab	No	6.5 Box	4.7L V8	3600	3850	5900		B32214	-	250	250	---	---	---	---	---	---	---	---	---
DAKOTA SLT	4x4	2003	Club Cab	No	6.5 Box	4.7L V8	3600	3850	5600		B32214	-	250	250	---	---	---	---	---	---	---	---	---
DAKOTA SLT	4x4	2003	Quad Cab	No	5.3 Box	3.9L V6	3600	3850	6010		B32214	-	50	100	---	---	---	---	---	---	---	---	---
DAKOTA SLT	4x4	2003	Quad Cab	No	5.3 Box	4.7L V8	3600	3850	6010		B32214	-	50	100	---	---	---	---	---	---	---	---	---
DAKOTA SLT	4x4	2003	Quad Cab	No	5.3 Box	5.9L V8	3600	3850	6010		B32214	-	50	50	---	---	---	---	---	---	---	---	---

Notes:

1. Ballast amounts are based on a "Representative Vehicle," defined in the vehicle selection guide instructions, and must be modified for all other configurations for axle and GVWR compliance.
45. Ballast amounts for Model 760LT and 810PP are calculated on reduced plow weights produced after March 2006 (Serial Number 0603 or later). See the weight and dimensional charts at the end of this guide for reduced, current and old plow weights.

2005 to 1997 Dodge

													LT			HD			SPEEDWING™		POWER PLOW™		
													680LT	720LT	760LT[45]	760 HD	800 HD	860 HD	760SW	860SW	810PP[45]	8611LP	8611PP
												Blade Width	6'-8"	7'-2"	7'-6"	7'-6"	8'-0"	8'-6"	7'-6"	8'-6"	8'-0" 10'-0"	8'-6" 11'-0"	8'-6" 11'-0"
												Blade Assembly	B0680	B0720	B0761	B0760	B0800	B0860	B0765	B0865	B0810	B0863	B0861
												Joystick Control	B62073								B62109		
												Touchpad Control	B62142								B62141		
Model		Year	Body Style	DRW	Box Option	Engine Type	Min FGAWR	Min RGAWR	Min GVWR	Headlight Conversion Harness	POWER HITCH™ System Under-carriage	POWER HITCH™ System Notes	Ballast Guidelines, lbs (1)										
DAKOTA SPORT	4x4	2003	Reg Cab	No	6.5 Box	3.9L V6	3600	3850	5900	HB5 use B62226	B32214	-	200	200	---	---	---	---	---	---	---	---	---
DAKOTA SPORT	4x4	2003	Reg Cab	No	6.5 Box	3.9L V6	3600	3850	5400		B32214	-	200	200	---	---	---	---	---	---	---	---	---
DAKOTA SPORT	4x4	2003	Reg Cab	No	6.5 Box	4.7L V8	3600	3850	5900		B32214	-	200	200	---	---	---	---	---	---	---	---	---
DAKOTA SPORT	4x4	2003	Reg Cab	No	6.5 Box	4.7L V8	3600	3850	5400		B32214	-	200	200	---	---	---	---	---	---	---	---	---
DAKOTA SPORT	4x4	2003	Club Cab	No	6.5 Box	3.9L V6	3600	3850	6010		B32214	-	200	250	---	---	---	---	---	---	---	---	---
DAKOTA SPORT	4x4	2003	Club Cab	No	6.5 Box	4.7L V8	3600	3850	6010		B32214	-	200	250	---	---	---	---	---	---	---	---	---
DAKOTA SPORT	4x4	2003	Club Cab	No	6.5 Box	4.7L V8	3600	3850	5900		B32214	-	200	250	---	---	---	---	---	---	---	---	---
DAKOTA SPORT	4x4	2003	Club Cab	No	6.5 Box	4.7L V8	3600	3850	5600		B32214	-	200	250	---	---	---	---	---	---	---	---	---
DAKOTA SPORT	4x4	2003	Quad Cab	No	5.3 Box	3.9L V6	3600	3850	6010		B32214	-	50	100	---	---	---	---	---	---	---	---	---
DAKOTA SPORT	4x4	2003	Quad Cab	No	5.3 Box	4.7L V8	3600	3850	6010		B32214	-	50	50	---	---	---	---	---	---	---	---	---
DAKOTA SPORT	4x4	2003	Quad Cab	No	5.3 Box	5.9L V8	3600	3850	6010		B32214	-	50	50	---	---	---	---	---	---	---	---	---
RAM 1500	4x4	2003	Reg Cab	No	6.3 Box	4.7L V8	3900	3900	6350	HB5 use B62222	B32048	-	---	---	400	---	---	---	---	---	---	---	---
RAM 2500	4x4	2003	Reg Cab	No	8.0 Box	5.7L V8	5200	6000	8650		B32057	-	---	---	---	450	450	450	---	550	700	800	---
RAM 2500	4x4	2003	Reg Cab	No	8.0 Box	8.0L V10	5200	6000	9000		B32057	-	---	---	---	600	600	600	---	650	---	---	---
RAM 2500	4x4	2003	Quad Cab	No	6.3 Box	5.7L V8	5200	6000	8800		B32057	-	---	---	---	350	350	350	---	450	600	900	---
RAM 2500	4x4	2003	Quad Cab	No	6.3 Box	8.0L V10	5200	6000	9000		B32057	-	---	---	---	500	500	500	---	900	---	---	---
RAM 2500	4x4	2003	Quad Cab	No	8.0 Box	5.7L V8	5200	6000	8800		B32057	-	---	---	---	400	400	400	---	500	650	---	---
RAM 2500	4x4	2003	Quad Cab	No	8.0 Box	8.0L V10	5200	6000	9000		B32057	-	---	---	---	750	900	950	---	---	---	---	---
RAM 2500	4x4	2003	All	No	Chassis	All	All	All	8501		B32057	-	---	---	---	?	?	?	---	?	?	?	---
RAM 2500	4x2	2003	All	No	Chassis	All	All	All	10001		B32057	-	---	---	---	?	?	?	---	?	?	?	---
RAM 2500 SLT	4x4	2003	Reg Cab	No	8.0 Box	5.7L V8	5200	6150	8650		B32057	-	---	---	---	450	450	450	---	550	700	900	---
RAM 2500 SLT	4x4	2003	Reg Cab	No	8.0 Box	8.0L V10	5200	6150	9000		B32057	-	---	---	---	600	600	600	---	950	---	---	---
RAM 2500 SLT	4x4	2003	Quad Cab	No	6.3 Box	5.7L V8	5200	6150	8800		B32057	-	---	---	---	350	350	400	---	450	600	---	---
RAM 2500 SLT	4x4	2003	Quad Cab	No	6.3 Box	8.0L V10	5200	6150	9000		B32057	-	---	---	---	600	700	750	---	---	---	---	---
RAM 2500 SLT	4x4	2003	Quad Cab	No	8.0 Box	5.7L V8	5200	6150	8800		B32057	-	---	---	---	400	400	450	---	500	900	---	---
RAM 3500	4x4	2003	Reg Cab	Yes	8.0 Box	5.7L V8	5200	9350	11500		B32057	-	---	---	---	---	---	200	---	250	400	---	---
RAM 3500	4x4	2003	Reg Cab	Yes	8.0 Box	8.0L V10	5200	9350	11500		B32057	-	---	---	---	---	---	650	---	---	---	---	---
RAM 3500	4x4	2003	Quad Cab	Yes	8.0 Box	5.7L V8	5200	9350	11500		B32057	-	---	---	---	---	---	150	---	300	---	---	---
RAM 3500	4x4	2003	All	Yes	Chassis	All	All	All	8501		B32057	-	---	---	---	---	---	?	---	?	?	?	---
RAM 3500	4x2	2003	All	Yes	Chassis	All	All	All	10001		B32057	-	---	---	---	---	---	?	---	?	?	?	---
RAM 3500 SLT	4x4	2003	Reg Cab	Yes	8.0 Box	5.7L V8	5200	9350	11500		B32057	-	---	---	---	---	---	200	---	300	650	---	---
RAM 3500 SLT	4x4	2003	Reg Cab	Yes	8.0 Box	8.0L V10	5200	9350	11500		B32057	-	---	---	---	---	---	900	---	---	---	---	---
RAM 3500 SLT	4x4	2003	Quad Cab	Yes	8.0 Box	5.7L V8	5200	9350	11500		B32057	-	---	---	---	---	---	150	---	400	---	---	---

Notes:

1. Ballast amounts are based on a "Representative Vehicle," defined in the vehicle selection guide instructions, and must be modified for all other configurations for axle and GVWR compliance.
45. Ballast amounts for Model 760LT and 810PP are calculated on reduced plow weights produced after March 2006 (Serial Number 0603 or later). See the weight and dimensional charts at the end of this guide for reduced, current and old plow weights.

2005 to 1997 Dodge

													LT			HD			SPEEDWING™		POWER PLOW™		
													680LT	720LT	760LT[45]	760 HD	800 HD	860 HD	760SW	860SW	810PP[45]	8611LP	8611PP
												Blade Width	6'-8"	7'-2"	7'-6"	7'-6"	8'-0"	8'-6"	7'-6"	8'-6"	8'-0" 10'-0"	8'-6" 11'-0"	8'-6" 11'-0"
												Blade Assembly	B0680	B0720	B0761	B0760	B0800	B0860	B0765	B0865	B0810	B0863	B0861
												Joystick Control	B62073								B62109		
												Touchpad Control	B62142								B62141		
Model		Year	Body Style	DRW	Box Option	Engine Type	Min FGAWR	Min RGAWR	Min GVWR	Headlight Conversion Harness	POWER HITCH™ System Under-carriage	POWER HITCH™ System Notes	Ballast Guidelines, lbs (1)										
DAKOTA	4x4	2002	Reg Cab	No	6.5 Box	3.9L V6	3600	3850	5900	HB5 use B62222	B32214	-	200	200	---	---	---	---	---	---	---	---	---
DAKOTA	4x4	2002	Reg Cab	No	6.5 Box	3.9L V6	3166	3166	5400		B32214	-	250	250	---	---	---	---	---	---	---	---	---
DAKOTA	4x4	2002	Club Cab	No	6.5 Box	3.9L V6	3166	3166	5900		B32214	-	300	400	---	---	---	---	---	---	---	---	---
DAKOTA	4x4	2002	Club Cab	No	6.5 Box	3.9L V6	3166	3166	5600		B32214	-	300	400	---	---	---	---	---	---	---	---	---
DAKOTA SLT	4x4	2002	Reg Cab	No	6.5 Box	3.9L V6	3600	3850	5900		B32214	-	200	200	---	---	---	---	---	---	---	---	---
DAKOTA SLT	4x4	2002	Reg Cab	No	6.5 Box	3.9L V6	3600	3850	5400		B32214	-	200	250	---	---	---	---	---	---	---	---	---
DAKOTA SLT	4x4	2002	Reg Cab	No	6.5 Box	4.7L V8	3600	3850	5900		B32214	-	200	200	---	---	---	---	---	---	---	---	---
DAKOTA SLT	4x4	2002	Reg Cab	No	6.5 Box	4.7L V8	3600	3850	5400		B32214	-	200	250	---	---	---	---	---	---	---	---	---
DAKOTA SLT	4x4	2002	Club Cab	No	6.5 Box	3.9L V6	3600	3850	5900		B32214	-	200	200	---	---	---	---	---	---	---	---	---
DAKOTA SLT	4x4	2002	Club Cab	No	6.5 Box	3.9L V6	3600	3850	5600		B32214	-	250	250	---	---	---	---	---	---	---	---	---
DAKOTA SLT	4x4	2002	Club Cab	No	6.5 Box	4.7L V8	3600	3850	5900		B32214	-	200	200	---	---	---	---	---	---	---	---	---
DAKOTA SLT	4x4	2002	Club Cab	No	6.5 Box	4.7L V8	3600	3850	5600		B32214	-	250	250	---	---	---	---	---	---	---	---	---
DAKOTA SLT	4x4	2002	Quad Cab	No	6.5 Box	3.9L V6	3600	3850	6010		B32214	-	50	100	---	---	---	---	---	---	---	---	---
DAKOTA SLT	4x4	2002	Quad Cab	No	6.5 Box	4.7L V8	3600	3850	6010		B32214	-	100	100	---	---	---	---	---	---	---	---	---
DAKOTA SLT	4x4	2002	Quad Cab	No	6.5 Box	5.9L V8	3600	3850	6010		B32214	-	150	150	---	---	---	---	---	---	---	---	---
DAKOTA SPORT	4x4	2002	Reg Cab	No	6.5 Box	3.9L V6	3600	3850	5900	HB5 use B62226	B32214	-	200	200	---	---	---	---	---	---	---	---	---
DAKOTA SPORT	4x4	2002	Reg Cab	No	6.5 Box	3.9L V6	3600	3850	5400		B32214	-	200	200	---	---	---	---	---	---	---	---	---
DAKOTA SPORT	4x4	2002	Reg Cab	No	6.5 Box	4.7L V8	3600	3850	5900		B32214	-	200	200	---	---	---	---	---	---	---	---	---
DAKOTA SPORT	4x4	2002	Reg Cab	No	6.5 Box	4.7L V8	3600	3850	5400		B32214	-	200	250	---	---	---	---	---	---	---	---	---
DAKOTA SPORT	4x4	2002	Club Cab	No	6.5 Box	3.9L V6	3600	3850	5900		B32214	-	200	200	---	---	---	---	---	---	---	---	---
DAKOTA SPORT	4x4	2002	Club Cab	No	6.5 Box	3.9L V6	3600	3850	5600		B32214	-	200	250	---	---	---	---	---	---	---	---	---
DAKOTA SPORT	4x4	2002	Club Cab	No	6.5 Box	4.7L V8	3600	3850	5900		B32214	-	200	200	---	---	---	---	---	---	---	---	---
DAKOTA SPORT	4x4	2002	Club Cab	No	6.5 Box	4.7L V8	3600	3850	5600		B32214	-	250	250	---	---	---	---	---	---	---	---	---
DAKOTA SPORT	4x4	2002	Quad Cab	No	6.5 Box	3.9L V6	3600	3850	6010		B32214	-	50	100	---	---	---	---	---	---	---	---	---
DAKOTA SPORT	4x4	2002	Quad Cab	No	6.5 Box	4.7L V8	3600	3850	6010		B32214	-	50	100	---	---	---	---	---	---	---	---	---
DAKOTA SPORT	4x4	2002	Quad Cab	No	6.5 Box	5.9L V8	3600	3850	6010		B32214	-	100	150	---	---	---	---	---	---	---	---	---
RAM 2500HD	4x4	2002	Reg Cab	No	8.0 Box	5.9L D	5200	6084	8800	HB1 use B62221 or HB5/HB1 use B62226	B32013	-	---	---	---	700	700	700	---	750	---	---	---
RAM 2500HD	4x4	2002	Reg Cab	No	8.0 Box	5.9L V8	5200	6084	8800		B32013	-	---	---	---	450	450	500	---	550	700	800	---
RAM 2500HD	4x4	2002	Reg Cab	No	8.0 Box	8.0L V10	5200	6084	8800		B32013	-	---	---	---	500	550	550	---	600	750	---	---
RAM 2500HD	4x4	2002	Quad Cab	No	6.3 Box	5.9L D	5200	6084	8800		B32013	-	---	---	---	600	700	750	---	---	---	---	---
RAM 2500HD	4x4	2002	Quad Cab	No	6.3 Box	5.9L V8	5200	6084	8800		B32013	-	---	---	---	400	400	400	---	450	650	750	---
RAM 2500HD	4x4	2002	Quad Cab	No	6.3 Box	8.0L V10	5200	6084	8800		B32013	-	---	---	---	450	450	450	---	550	850	---	---

Notes:

1. Ballast amounts are based on a "Representative Vehicle," defined in the vehicle selection guide instructions, and must be modified for all other configurations for axle and GVWR compliance.
45. Ballast amounts for Model 760LT and 810PP are calculated on reduced plow weights produced after March 2006 (Serial Number 0603 or later). See the weight and dimensional charts at the end of this guide for reduced, current and old plow weights.

2005 to 1997 Dodge

													LT			HD			SPEEDWING™		POWER PLOW™		
													680LT	720LT	760LT[45]	760 HD	800 HD	860 HD	760SW	860SW	810PP[45]	8611LP	8611PP
												Blade Width	6'-8"	7'-2"	7'-6"	7'-6"	8'-0"	8'-6"	7'-6"	8'-6"	8'-0" 10'-0"	8'-6" 11'-0"	8'-6" 11'-0"
												Blade Assembly	B0680	B0720	B0761	B0760	B0800	B0860	B0765	B0865	B0810	B0863	B0861
												Joystick Control	B62073								B62109		
												Touchpad Control	B62142								B62141		
Model		Year	Body Style	DRW	Box Option	Engine Type	Min FGAWR	Min RGAWR	Min GVWR	Headlight Conversion Harness	POWER HITCH™ System Under-carriage	POWER HITCH™ System Notes	Ballast Guidelines, lbs (1)										
RAM 2500HD	4x4	2002	Quad Cab	No	8.0 Box	5.9L D	5200	6084	8800	HB1 use B62221 or HB5/HB1 use B62226	B32013	-	---	---	---	1000	---	---	---	---	---	---	---
RAM 2500HD	4x4	2002	Quad Cab	No	8.0 Box	5.9L V8	5200	6084	8800		B32013	-	---	---	---	400	450	450	---	500	650	750	---
RAM 2500HD	4x4	2002	Quad Cab	No	8.0 Box	8.0L V10	5200	6084	8800		B32013	-	---	---	---	500	500	500	---	550	---	---	---
RAM 2500HD	4x4	2002	All	No	Chassis	All	All	All	8501		B32013	-	---	---	---	?	?	?	---	?	?	?	---
RAM 3500	4x4	2002	Reg Cab	Yes	8.0 Box	5.9L D	5200	7500	10500		B32013	-	---	---	---	---	---	550	---	900	---	---	---
RAM 3500	4x4	2002	Reg Cab	Yes	8.0 Box	5.9L V8	5200	7500	10500		B32013	-	---	---	---	---	---	350	---	400	550	650	---
RAM 3500	4x4	2002	Reg Cab	Yes	8.0 Box	8.0L V10	5200	7500	10500		B32013	-	---	---	---	---	---	400	---	450	650	---	---
RAM 3500	4x4	2002	Quad Cab	Yes	8.0 Box	5.9L V8	5200	7500	11000		B32013	-	---	---	---	---	---	300	---	350	500	850	---
RAM 3500	4x4	2002	Quad Cab	Yes	8.0 Box	8.0L V10	5200	7500	11000		B32013	-	---	---	---	---	---	350	---	550	---	---	---
RAM 3500	4x4	2002	All	Yes	Chassis	All	All	All	8501		B32013	-	---	---	---	---	---	?	---	?	?	?	---
RAM 3500	4x2	2002	Reg Cab	Yes	8.0 Box	5.9L V8	4500	7500	10500		B32013	-	---	---	---	---	---	250	---	300	800	---	---
RAM 3500	4x2	2002	Reg Cab	Yes	8.0 Box	8.0L V10	4500	7500	10500		B32013	-	---	---	---	---	---	800	---	---	---	---	---
RAM 3500	4x2	2002	Quad Cab	Yes	8.0 Box	5.9L V8	4500	7500	10500		B32013	-	---	---	---	---	---	200	---	600	---	---	---
RAM 3500	4x2	2002	All	Yes	Chassis	All	All	All	10001		B32013	-	---	---	---	---	---	?	---	?	?	?	---
DAKOTA	4x4	2001	Reg Cab	No	6.5 Box	3.9L V6	3600	3850	5920	HB5 use B62222	B32214	-	200	250	---	---	---	---	---	---	---	---	---
DAKOTA	4x4	2001	Reg Cab	No	6.5 Box	3.9L V6	3600	3850	5330		B32214	-	200	250	---	---	---	---	---	---	---	---	---
DAKOTA	4x4	2001	Reg Cab	No	6.5 Box	3.9L V6	3166	3850	5920		B32214	-	200	250	---	---	---	---	---	---	---	---	---
DAKOTA	4x4	2001	Reg Cab	No	6.5 Box	3.9L V6	3166	3850	5330		B32214	-	200	250	---	---	---	---	---	---	---	---	---
DAKOTA	4x4	2001	Reg Cab	No	6.5 Box	4.7L V8	3600	3850	5990		B32214	-	200	250	---	---	---	---	---	---	---	---	---
DAKOTA	4x4	2001	Reg Cab	No	6.5 Box	4.7L V8	3600	3850	5410		B32214	-	200	250	---	---	---	---	---	---	---	---	---
DAKOTA	4x4	2001	Club Cab	No	6.5 Box	3.9L V6	3600	3850	5930		B32214	-	200	250	---	---	---	---	---	---	---	---	---
DAKOTA	4x4	2001	Club Cab	No	6.5 Box	3.9L V6	3600	3850	5540		B32214	-	200	250	---	---	---	---	---	---	---	---	---
DAKOTA	4x4	2001	Club Cab	No	6.5 Box	3.9L V6	3166	3850	5930		B32214	-	200	250	---	---	---	---	---	---	---	---	---
DAKOTA	4x4	2001	Club Cab	No	6.5 Box	3.9L V6	3166	3850	5540		B32214	-	200	250	---	---	---	---	---	---	---	---	---
DAKOTA	4x4	2001	Club Cab	No	6.5 Box	4.7L V8	3600	3850	6000		B32214	-	250	250	---	---	---	---	---	---	---	---	---
DAKOTA	4x4	2001	Club Cab	No	6.5 Box	4.7L V8	3600	3850	5620		B32214	-	250	250	---	---	---	---	---	---	---	---	---
DAKOTA	4x4	2001	Quad Cab	No	5.5 Box	3.9L V6	3600	3850	5890		B32214	-	100	100	---	---	---	---	---	---	---	---	---
DAKOTA	4x4	2001	Quad Cab	No	5.5 Box	4.7L V8	3600	3850	5960		B32214	-	100	150	---	---	---	---	---	---	---	---	---
DAKOTA	4x4	2001	Quad Cab	No	5.5 Box	5.9L V8	3600	3850	5960		B32214	-	100	150	---	---	---	---	---	---	---	---	---

Notes:

1. Ballast amounts are based on a "Representative Vehicle," defined in the vehicle selection guide instructions, and must be modified for all other configurations for axle and GVWR compliance.
45. Ballast amounts for Model 760LT and 810PP are calculated on reduced plow weights produced after March 2006 (Serial Number 0603 or later). See the weight and dimensional charts at the end of this guide for reduced, current and old plow weights.

2005 to 1997 Dodge

													LT			HD			SPEEDWING™		POWER PLOW™		
													680LT	720LT	760LT[45]	760 HD	800 HD	860 HD	760SW	860SW	810PP[45]	8611LP	8611PP
												Blade Width	6'-8"	7'-2"	7'-6"	7'-6"	8'-0"	8'-6"	7'-6"	8'-6"	8'-0" 10'-0"	8'-6" 11'-0"	8'-6" 11'-0"
												Blade Assembly	B0680	B0720	B0761	B0760	B0800	B0860	B0765	B0865	B0810	B0863	B0861
												Joystick Control	B62073								B62109		
												Touchpad Control	B62142								B62141		
Model		Year	Body Style	DRW	Box Option	Engine Type	Min FGAWR	Min RGAWR	Min GVWR	Headlight Conversion Harness	POWER HITCH™ System Under-carriage	POWER HITCH™ System Notes	Ballast Guidelines, lbs (1)										
RAM 1500	4x4	2001	Reg Cab	No	6.5 Box	5.2L V8	3850	3600	6400	HB1 use B62221 or HB5/HB1 use B62226	B32037	-	---	---	400	---	---	---	---	---	---	---	---
RAM 1500	4x4	2001	Reg Cab	No	6.5 Box	5.9L V8	3850	3600	6400		B32037	-	---	---	400	---	---	---	---	---	---	---	---
RAM 2500HD	4x4	2001	Reg Cab	No	8.0 Box	5.9L D	5200	6500	8800		B32013	-	---	---	---	750	750	800	---	850	---	---	---
RAM 2500HD	4x4	2001	Reg Cab	No	8.0 Box	5.9L V8	5200	6200	8800		B32013	-	---	---	---	550	550	550	---	600	800	900	---
RAM 2500HD	4x4	2001	Reg Cab	No	8.0 Box	8.0L V10	5200	6500	8800		B32013	-	---	---	---	600	600	600	---	700	850	---	---
RAM 2500HD	4x4	2001	Quad Cab	No	6.5 Box	5.9L D	5200	6500	8800		B32013	-	---	---	---	700	750	800	---	---	---	---	---
RAM 2500HD	4x4	2001	Quad Cab	No	6.5 Box	5.9L V8	5200	6200	8800		B32013	-	---	---	---	450	450	450	---	550	700	800	---
RAM 2500HD	4x4	2001	Quad Cab	No	6.5 Box	8.0L V10	5200	6500	8800		B32013	-	---	---	---	500	550	550	---	600	1000	---	---
RAM 2500HD	4x4	2001	Quad Cab	No	8.0 Box	5.9L V8	5200	6200	8800		B32013	-	---	---	---	500	500	500	---	550	750	850	---
RAM 2500HD	4x4	2001	Quad Cab	No	8.0 Box	8.0L V10	5200	6500	8800		B32013	-	---	---	---	550	550	550	---	650	---	---	---
RAM 2500HD	4x4	2001	All	No	Chassis	All	All	All	8501		B32013	-	---	---	---	?	?	?	---	?	?	?	---
RAM 3500	4x4	2001	Reg Cab	Yes	8.0 Box	5.9L V8	4850	7500	10500		B32013	-	---	---	---	---	---	0	---	50	200	350	---
RAM 3500	4x4	2001	Reg Cab	Yes	8.0 Box	8.0L V10	4850	7500	10500		B32013	-	---	---	---	---	---	650	---	---	---	---	---
RAM 3500	4x4	2001	Quad Cab	Yes	8.0 Box	5.9L V8	5200	7500	10500		B32013	-	---	---	---	---	---	350	---	400	550	800	---
RAM 3500	4x4	2001	Quad Cab	Yes	8.0 Box	8.0L V10	5200	7500	10500		B32013	-	---	---	---	---	---	400	---	550	---	---	---
RAM 3500	4x4	2001	All	Yes	Chassis	All	All	All	8501		B32013	-	---	---	---	---	---	?	---	?	?	?	---
RAM 3500	4x2	2001	Reg Cab	Yes	8.0 Box	5.9L V8	4500	7500	10500		B32013	-	---	---	---	---	---	250	---	300	850	---	---
RAM 3500	4x2	2001	Reg Cab	Yes	8.0 Box	8.0L V10	4500	7500	10500		B32013	-	---	---	---	---	---	550	---	1000	---	---	---
RAM 3500	4x2	2001	Quad Cab	Yes	8.0 Box	5.9L V8	4500	7500	10500		B32013	-	---	---	---	---	---	250	---	650	---	---	---
RAM 3500	4x2	2001	All	Yes	Chassis	All	All	All	10001		B32013	-	---	---	---	---	---	?	---	?	?	?	---
DAKOTA	4x4	2000	Reg Cab	No	6.5 Box	3.9L V6	3600	3850	5920	HB5 use B62222	B32214	-	200	250	---	---	---	---	---	---	---	---	---
DAKOTA	4x4	2000	Reg Cab	No	6.5 Box	3.9L V6	3600	3850	5330		B32214	-	200	250	---	---	---	---	---	---	---	---	---
DAKOTA	4x4	2000	Reg Cab	No	6.5 Box	3.9L V6	3166	3850	5920		B32214	-	200	250	---	---	---	---	---	---	---	---	---
DAKOTA	4x4	2000	Reg Cab	No	6.5 Box	3.9L V6	3166	3850	5330		B32214	-	200	250	---	---	---	---	---	---	---	---	---
DAKOTA	4x4	2000	Reg Cab	No	6.5 Box	4.7L V8	3600	3850	5990		B32214	-	200	250	---	---	---	---	---	---	---	---	---
DAKOTA	4x4	2000	Reg Cab	No	6.5 Box	4.7L V8	3600	3850	5410		B32214	-	200	250	---	---	---	---	---	---	---	---	---
DAKOTA	4x4	2000	Club Cab	No	6.5 Box	3.9L V6	3600	3850	5930		B32214	-	200	250	---	---	---	---	---	---	---	---	---
DAKOTA	4x4	2000	Club Cab	No	6.5 Box	3.9L V6	3600	3850	5540		B32214	-	200	250	---	---	---	---	---	---	---	---	---
DAKOTA	4x4	2000	Club Cab	No	6.5 Box	3.9L V6	3166	3850	5930		B32214	-	200	250	---	---	---	---	---	---	---	---	---
DAKOTA	4x4	2000	Club Cab	No	6.5 Box	3.9L V6	3166	3850	5540		B32214	-	200	250	---	---	---	---	---	---	---	---	---
DAKOTA	4x4	2000	Club Cab	No	6.5 Box	4.7L V8	3600	3850	6000		B32214	-	250	250	---	---	---	---	---	---	---	---	---
DAKOTA	4x4	2000	Club Cab	No	6.5 Box	4.7L V8	3600	3850	5620		B32214	-	250	250	---	---	---	---	---	---	---	---	---

Notes:

1. Ballast amounts are based on a "Representative Vehicle," defined in the vehicle selection guide instructions, and must be modified for all other configurations for axle and GVWR compliance.
45. Ballast amounts for Model 760LT and 810PP are calculated on reduced plow weights produced after March 2006 (Serial Number 0603 or later). See the weight and dimensional charts at the end of this guide for reduced, current and old plow weights.

2005 to 1997 Dodge

													LT			HD			SPEEDWING™		POWER PLOW™		
													680LT	720LT	760LT[45]	760 HD	800 HD	860 HD	760SW	860SW	810PP[45]	8611LP	8611PP
												Blade Width	6'-8"	7'-2"	7'-6"	7'-6"	8'-0"	8'-6"	7'-6"	8'-6"	8'-0" 10'-0"	8'-6" 11'-0"	8'-6" 11'-0"
												Blade Assembly	B0680	B0720	B0761	B0760	B0800	B0860	B0765	B0865	B0810	B0863	B0861
												Joystick Control	B62073								B62109		
												Touchpad Control	B62142								B62141		
Model		Year	Body Style	DRW	Box Option	Engine Type	Min FGAWR	Min RGAWR	Min GVWR	Headlight Conversion Harness	POWER HITCH™ System Under-carriage	POWER HITCH™ System Notes	Ballast Guidelines, lbs (1)										
DAKOTA	4x4	2000	Quad Cab	No	5.5 Box	3.9L V6	3600	3850	5890	HB5 use B62222	B32214	-	100	100	---	---	---	---	---	---	---	---	---
DAKOTA	4x4	2000	Quad Cab	No	5.5 Box	4.7L V8	3600	3850	5960		B32214	-	100	150	---	---	---	---	---	---	---	---	---
DAKOTA	4x4	2000	Quad Cab	No	5.5 Box	5.9L V8	3600	3850	5960		B32214	-	100	150	---	---	---	---	---	---	---	---	---
RAM 1500	4x4	2000	Reg Cab	No	6.5 Box	5.2L V8	3850	3600	6400	HB1 use B62221 or HB5/HB1 use B62226	B32037	-	---	---	400	---	---	---	---	---	---	---	---
RAM 1500	4x4	2000	Reg Cab	No	6.5 Box	5.9L V8	3850	3600	6400		B32037	-	---	---	400	---	---	---	---	---	---	---	---
RAM 2500HD	4x4	2000	Reg Cab	No	8.0 Box	5.9L D	5200	6500	8800		B32013	-	---	---	---	750	750	800	---	850	---	---	---
RAM 2500HD	4x4	2000	Reg Cab	No	8.0 Box	5.9L V8	5200	6200	8800		B32013	-	---	---	---	550	550	550	---	600	800	900	---
RAM 2500HD	4x4	2000	Reg Cab	No	8.0 Box	8.0L V10	5200	6500	8800		B32013	-	---	---	---	600	600	600	---	700	850	---	---
RAM 2500HD	4x4	2000	Quad Cab	No	6.5 Box	5.9L D	5200	6500	8800		B32013	-	---	---	---	700	750	800	---	---	---	---	---
RAM 2500HD	4x4	2000	Quad Cab	No	6.5 Box	5.9L V8	5200	6200	8800		B32013	-	---	---	---	450	450	450	---	550	700	800	---
RAM 2500HD	4x4	2000	Quad Cab	No	6.5 Box	8.0L V10	5200	6500	8800		B32013	-	---	---	---	500	550	550	---	600	1000	---	---
RAM 2500HD	4x4	2000	Quad Cab	No	8.0 Box	5.9L V8	5200	6200	8800		B32013	-	---	---	---	500	500	500	---	550	750	850	---
RAM 2500HD	4x4	2000	Quad Cab	No	8.0 Box	8.0L V10	5200	6500	8800		B32013	-	---	---	---	550	550	550	---	650	---	---	---
RAM 2500HD	4x4	2000	All	No	Chassis	All	All	All	10000		B32013	-	---	---	---	?	?	?	---	?	?	?	---
RAM 3500	4x4	2000	Reg Cab	Yes	8.0 Box	5.9L V8	4850	7500	10500		B32013	-	---	---	---	---	---	0	---	50	200	350	---
RAM 3500	4x4	2000	Reg Cab	Yes	8.0 Box	8.0L V10	4850	7500	10500		B32013	-	---	---	---	---	---	650	---	---	---	---	---
RAM 3500	4x4	2000	Quad Cab	Yes	8.0 Box	5.9L V8	5200	7500	10500		B32013	-	---	---	---	---	---	350	---	400	550	800	---
RAM 3500	4x4	2000	Quad Cab	Yes	8.0 Box	8.0L V10	5200	7500	10500		B32013	-	---	---	---	---	---	400	---	550	---	---	---
RAM 3500	4x4	2000	All	Yes	Chassis	All	All	All	10000		B32013	-	---	---	---	---	---	?	---	?	?	?	---
RAM 3500	4x2	2000	Reg Cab	Yes	8.0 Box	5.9L V8	4500	7500	10500		B32013	-	---	---	---	---	---	250	---	300	850	---	---
RAM 3500	4x2	2000	Reg Cab	Yes	8.0 Box	8.0L V10	4500	7500	10500		B32013	-	---	---	---	---	---	550	---	1000	---	---	---
RAM 3500	4x2	2000	Quad Cab	Yes	8.0 Box	5.9L V8	4500	7500	10500		B32013	-	---	---	---	---	---	250	---	650	---	---	---
RAM 3500	4x2	2000	All	Yes	Chassis	All	All	All	10001		B32013	-	---	---	---	---	---	?	---	?	?	?	---
DAKOTA	4x4	1999	Reg Cab	No	6.5 Box	3.9L V6	3400	3850	5900	HB5 use B62222	B32214	-	250	250	---	---	---	---	---	---	---	---	---
DAKOTA	4x4	1999	Reg Cab	No	6.5 Box	3.9L V6	3400	3000	5280		B32214	-	250	250	---	---	---	---	---	---	---	---	---
DAKOTA	4x4	1999	Reg Cab	No	6.5 Box	3.9L V6	3166	3850	5900		B32214	-	250	300	---	---	---	---	---	---	---	---	---
DAKOTA	4x4	1999	Reg Cab	No	6.5 Box	3.9L V6	3166	3000	5280		B32214	-	250	300	---	---	---	---	---	---	---	---	---
DAKOTA	4x4	1999	Reg Cab	No	6.5 Box	5.2L V8	3400	3850	6000		B32214	-	300	300	---	---	---	---	---	---	---	---	---
DAKOTA	4x4	1999	Reg Cab	No	6.5 Box	5.2L V8	3400	3000	5380		B32214	-	300	300	---	---	---	---	---	---	---	---	---
DAKOTA	4x4	1999	Reg Cab	No	6.5 Box	5.2L V8	3166	3850	6000		B32214	-	300	350	---	---	---	---	---	---	---	---	---
DAKOTA	4x4	1999	Reg Cab	No	6.5 Box	5.2L V8	3166	3000	5380		B32214	-	300	350	---	---	---	---	---	---	---	---	---

Notes:

1. Ballast amounts are based on a "Representative Vehicle," defined in the vehicle selection guide instructions, and must be modified for all other configurations for axle and GVWR compliance.
45. Ballast amounts for Model 760LT and 810PP are calculated on reduced plow weights produced after March 2006 (Serial Number 0603 or later). See the weight and dimensional charts at the end of this guide for reduced, current and old plow weights.

2005 to 1997 Dodge

													LT			HD			SPEEDWING™		POWER PLOW™		
													680LT	720LT	760LT[45]	760 HD	800 HD	860 HD	760SW	860SW	810PP[45]	8611LP	8611PP
												Blade Width	6'-8"	7'-2"	7'-6"	7'-6"	8'-0"	8'-6"	7'-6"	8'-6"	8'-0" 10'-0"	8'-6" 11'-0"	8'-6" 11'-0"
												Blade Assembly	B0680	B0720	B0761	B0760	B0800	B0860	B0765	B0865	B0810	B0863	B0861
												Joystick Control	B62073								B62109		
												Touchpad Control	B62142								B62141		
Model		Year	Body Style	DRW	Box Option	Engine Type	Min FGAWR	Min RGAWR	Min GVWR	Headlight Conversion Harness	POWER HITCH™ System Under-carriage	POWER HITCH™ System Notes	Ballast Guidelines, lbs (1)										
DAKOTA	4x4	1999	Ext Cab	No	6.5 Box	3.9L V6	3400	3850	5850	HB5 use B62222	B32214	-	250	250	---	---	---	---	---	---	---	---	---
DAKOTA	4x4	1999	Ext Cab	No	6.5 Box	3.9L V6	3400	3000	5500		B32214	-	250	250	---	---	---	---	---	---	---	---	---
DAKOTA	4x4	1999	Ext Cab	No	6.5 Box	3.9L V6	3166	3850	5850		B32214	-	350	450	---	---	---	---	---	---	---	---	---
DAKOTA	4x4	1999	Ext Cab	No	6.5 Box	3.9L V6	3166	3000	5500		B32214	-	350	450	---	---	---	---	---	---	---	---	---
DAKOTA	4x4	1999	Ext Cab	No	6.5 Box	5.2L V8	3400	3850	5990		B32214	-	300	300	---	---	---	---	---	---	---	---	---
DAKOTA	4x4	1999	Ext Cab	No	6.5 Box	5.2L V8	3400	3000	5600		B32214	-	300	300	---	---	---	---	---	---	---	---	---
DAKOTA	4x4	1999	Ext Cab	No	6.5 Box	5.2L V8	3166	3850	5990		B32214	-	900	1000	---	---	---	---	---	---	---	---	---
RAM 1500	4x4	1999	Reg Cab	No	6.5 Box	5.2L V8	3850	3600	6400	HB1 use B62221 or HB5/HB1 use B62226	B32037	-	---	---	350	---	---	---	---	---	---	---	---
RAM 1500	4x4	1999	Reg Cab	No	6.5 Box	5.9L V8	3850	3600	6400		B32037	-	---	---	400	---	---	---	---	---	---	---	---
RAM 1500	4x4	1999	Reg Cab	No	8.0 Box	5.2L V8	3850	3600	6400		B32037	-	---	---	400	---	---	---	---	---	---	---	---
RAM 1500	4x4	1999	Reg Cab	No	8.0 Box	5.9L V8	3850	3600	6400		B32037	-	---	---	500	---	---	---	---	---	---	---	---
RAM 2500HD	4x4	1999	Reg Cab	No	8.0 Box	5.9L V8	4850	6084	8800		B32013	-	---	---	---	450	450	450	---	550	700	800	---
RAM 2500HD	4x4	1999	Reg Cab	No	8.0 Box	8.0L V10	4850	6084	8800		B32013	-	---	---	---	550	550	550	---	700	---	---	---
RAM 2500HD	4x4	1999	Ext Cab	No	6.5 Box	5.9L V8	4850	6084	8800		B32013	-	---	---	---	500	500	500	---	600	750	950	---
RAM 2500HD	4x4	1999	Ext Cab	No	6.5 Box	8.0L V10	4850	6084	8800		B32013	-	---	---	---	650	650	700	---	---	---	---	---
RAM 2500HD	4x4	1999	Ext Cab	No	8.0 Box	5.9L V8	4850	6084	8800		B32013	-	---	---	---	450	450	450	---	550	1000	---	---
RAM 2500HD	4x4	1999	Ext Cab	No	8.0 Box	8.0L V10	4850	6084	8800		B32013	-	---	---	---	450	500	500	---	900	---	---	---
RAM 2500HD	4x4	1999	Quad Cab	No	6.5 Box	5.9L V8	4850	6084	8800		B32013	-	---	---	---	500	500	500	---	550	750	950	---
RAM 2500HD	4x4	1999	Quad Cab	No	6.5 Box	8.0L V10	4850	6084	8800		B32013	-	---	---	---	650	650	700	---	---	---	---	---
RAM 2500HD	4x4	1999	Quad Cab	No	8.0 Box	5.9L V8	4850	6084	8800		B32013	-	---	---	---	450	450	450	---	500	---	---	---
RAM 2500HD	4x4	1999	Quad Cab	No	8.0 Box	8.0L V10	4850	6084	8800		B32013	-	---	---	---	450	500	550	---	1000	---	---	---
RAM 2500HD	4x4	1999	All	No	Chassis	All	All	All	8501		B32013	-	---	---	---	?	?	?	---	?	?	?	---
RAM 3500	4x4	1999	Reg Cab	Yes	8.0 Box	5.9L V8	4850	7500	10500		B32013	-	---	---	---	---	---	400	---	500	800	---	---
RAM 3500	4x4	1999	Reg Cab	Yes	8.0 Box	8.0L V10	4850	7500	10500		B32013	-	---	---	---	---	---	550	---	800	---	---	---
RAM 3500	4x4	1999	Quad Cab	Yes	8.0 Box	5.9L V8	4850	7500	11000		B32013	-	---	---	---	---	---	300	---	500	---	---	---
RAM 3500	4x4	1999	All	Yes	Chassis	All	All	All	8501		B32013	-	---	---	---	---	---	?	---	?	?	?	---
RAM 3500	4x2	1999	Reg Cab	Yes	8.0 Box	5.9L V8	4500	7500	10500		B32013	-	---	---	---	---	---	300	---	350	650	---	---
RAM 3500	4x2	1999	Reg Cab	Yes	8.0 Box	8.0L V10	4500	7500	10500		B32013	-	---	---	---	---	---	200	---	400	---	---	---
RAM 3500	4x2	1999	Quad Cab	Yes	8.0 Box	5.9L V8	4500	7500	10500		B32013	-	---	---	---	---	---	200	---	650	---	---	---
RAM 3500	4x2	1999	All	Yes	Chassis	All	All	All	10001		B32013	-	---	---	---	---	---	?	---	?	?	?	---

Notes:

1. Ballast amounts are based on a "Representative Vehicle," defined in the vehicle selection guide instructions, and must be modified for all other configurations for axle and GVWR compliance.
45. Ballast amounts for Model 760LT and 810PP are calculated on reduced plow weights produced after March 2006 (Serial Number 0603 or later). See the weight and dimensional charts at the end of this guide for reduced, current and old plow weights.

2005 to 1997 Dodge

													LT			HD			SPEEDWING™		POWER PLOW™		
													680LT	720LT	760LT[45]	760 HD	800 HD	860 HD	760SW	860SW	810PP[45]	8611LP	8611PP
												Blade Width	6'-8"	7'-2"	7'-6"	7'-6"	8'-0"	8'-6"	7'-6"	8'-6"	8'-0" 10'-0"	8'-6" 11'-0"	8'-6" 11'-0"
												Blade Assembly	B0680	B0720	B0761	B0760	B0800	B0860	B0765	B0865	B0810	B0863	B0861
												Joystick Control	B62073								B62109		
												Touchpad Control	B62142								B62141		
Model		Year	Body Style	DRW	Box Option	Engine Type	Min FGAWR	Min RGAWR	Min GVWR	Headlight Conversion Harness	POWER HITCH™ System Under-carriage	POWER HITCH™ System Notes	Ballast Guidelines, lbs (1)										
DAKOTA	4x4	1998	Reg Cab	No	6.5 Box	3.9L V6	3400	3850	5860	HB5 use B62222	B32214	-	250	300	---	---	---	---	---	---	---	---	---
DAKOTA	4x4	1998	Reg Cab	No	6.5 Box	3.9L V6	3166	3000	5240		B32214	-	250	300	---	---	---	---	---	---	---	---	---
DAKOTA	4x4	1998	Reg Cab	No	6.5 Box	5.2L V8	3400	3850	5860		B32214	-	350	350	---	---	---	---	---	---	---	---	---
DAKOTA	4x4	1998	Reg Cab	No	6.5 Box	5.2L V8	3166	3000	5240		B32214	-	350	350	---	---	---	---	---	---	---	---	---
DAKOTA	4x4	1998	Ext Cab	No	6.5 Box	3.9L V6	3400	3850	5900		B32214	-	250	300	---	---	---	---	---	---	---	---	---
DAKOTA	4x4	1998	Ext Cab	No	6.5 Box	3.9L V6	3166	3000	5480		B32214	-	250	350	---	---	---	---	---	---	---	---	---
DAKOTA	4x4	1998	Ext Cab	No	6.5 Box	5.2L V8	3400	3850	5900		B32214	-	250	300	---	---	---	---	---	---	---	---	---
RAM 1500	4x4	1998	Reg Cab	No	6.5 Box	5.2L V8	3850	3600	6400	HB1 use B62221 or B62226	B32037	-	---	---	350	---	---	---	---	---	---	---	---
RAM 1500	4x4	1998	Reg Cab	No	6.5 Box	5.9L V8	3850	3600	6400		B32037	-	---	---	350	---	---	---	---	---	---	---	---
RAM 1500	4x4	1998	Reg Cab	No	8.0 Box	5.2L V8	3850	3600	6400		B32037	-	---	---	400	---	---	---	---	---	---	---	---
RAM 1500	4x4	1998	Reg Cab	No	8.0 Box	5.9L V8	3850	3600	6400		B32037	-	---	---	500	---	---	---	---	---	---	---	---
RAM 2500HD	4x4	1998	Reg Cab	No	8.0 Box	5.9L V8	4850	6084	8800		B32013	-	---	---	---	450	450	450	---	550	700	800	---
RAM 2500HD	4x4	1998	Reg Cab	No	8.0 Box	8.0L V10	4850	6084	8800		B32013	-	---	---	---	550	550	550	---	700	---	---	---
RAM 2500HD	4x4	1998	Ext Cab	No	6.5 Box	5.9L V8	4850	6084	8800		B32013	-	---	---	---	500	500	500	---	600	750	950	---
RAM 2500HD	4x4	1998	Ext Cab	No	6.5 Box	8.0L V10	4850	6084	8800		B32013	-	---	---	---	650	650	650	---	---	---	---	---
RAM 2500HD	4x4	1998	Ext Cab	No	8.0 Box	5.9L V8	4850	6084	8800		B32013	-	---	---	---	450	450	450	---	550	1000	---	---
RAM 2500HD	4x4	1998	Ext Cab	No	8.0 Box	8.0L V10	4850	6084	8800		B32013	-	---	---	---	450	450	500	---	900	---	---	---
RAM 2500HD	4x4	1998	Quad Cab	No	6.5 Box	5.9L V8	4850	6084	8800		B32013	-	---	---	---	450	500	500	---	550	750	950	---
RAM 2500HD	4x4	1998	Quad Cab	No	6.5 Box	8.0L V10	4850	6084	8800		B32013	-	---	---	---	650	650	650	---	---	---	---	---
RAM 2500HD	4x4	1998	Quad Cab	No	8.0 Box	5.9L V8	4850	6084	8800		B32013	-	---	---	---	450	450	450	---	500	1000	---	---
RAM 2500HD	4x4	1998	Quad Cab	No	8.0 Box	8.0L V10	4850	6084	8800		B32013	-	---	---	---	450	450	500	---	1000	---	---	---
RAM 2500HD	4x4	1998	All	No	Chassis	All	All	All	8501		B32013	-	---	---	---	?	?	?	---	?	?	?	---
RAM 3500	4x4	1998	Reg Cab	Yes	8.0 Box	5.9L V8	4850	7500	10500		B32013	-	---	---	---	---	---	400	---	500	800	---	---
RAM 3500	4x4	1998	Reg Cab	Yes	8.0 Box	8.0L V10	4850	7500	10500		B32013	-	---	---	---	---	---	550	---	800	---	---	---
RAM 3500	4x4	1998	Quad Cab	Yes	8.0 Box	5.9L V8	4850	7500	11000		B32013	-	---	---	---	---	---	250	---	500	---	---	---
RAM 3500	4x4	1998	All	Yes	Chassis	All	All	All	10000		B32013	-	---	---	---	---	---	?	---	?	?	?	---
RAM 3500	4x2	1998	Reg Cab	Yes	8.0 Box	5.9L V8	4500	7500	10500		B32013	-	---	---	---	---	---	300	---	350	650	---	---
RAM 3500	4x2	1998	Reg Cab	Yes	8.0 Box	8.0L V10	4500	7500	10500		B32013	-	---	---	---	---	---	200	---	400	---	---	---
RAM 3500	4x2	1998	Quad Cab	Yes	8.0 Box	5.9L V8	4500	7500	10500		B32013	-	---	---	---	---	---	200	---	650	---	---	---
RAM 3500	4x2	1998	All	Yes	Chassis	All	All	All	10001		B32013	-	---	---	---	---	---	?	---	?	?	?	---

Notes:

1. Ballast amounts are based on a "Representative Vehicle," defined in the vehicle selection guide instructions, and must be modified for all other configurations for axle and GVWR compliance.
45. Ballast amounts for Model 760LT and 810PP are calculated on reduced plow weights produced after March 2006 (Serial Number 0603 or later). See the weight and dimensional charts at the end of this guide for reduced, current and old plow weights.

2005 to 1997 Dodge

													POWER HITCH™										
													LT			HD			SPEEDWING™		POWER PLOW™		
													680LT	720LT	760LT[45]	760 HD	800 HD	860 HD	760SW	860SW	810PP[45]	8611LP	8611PP
												Blade Width	6'-8"	7'-2"	7'-6"	7'-6"	8'-0"	8'-6"	7'-6"	8'-6"	8'-0" 10'-0"	8'-6" 11'-0"	8'-6" 11'-0"
												Blade Assembly	B0680	B0720	B0761	B0760	B0800	B0860	B0765	B0865	B0810	B0863	B0861
												Joystick Control	B62073								B62109		
												Touchpad Control	B62142								B62141		
Model		Year	Body Style	DRW	Box Option	Engine Type	Min FGAWR	Min RGAWR	Min GVWR	Headlight Conversion Harness	POWER HITCH™ System Under-carriage	POWER HITCH™ System Notes	Ballast Guidelines, lbs (1)										
DAKOTA	4x4	1997	Reg Cab	No	6.5 Box	3.9L V6	3400	3850	5830	HB5 use B62222	B32214	-	200	250	---	---	---	---	---	---	---	---	---
DAKOTA	4x4	1997	Reg Cab	No	6.5 Box	3.9L V6	3166	3000	5200		B32214	-	200	250	---	---	---	---	---	---	---	---	---
DAKOTA	4x4	1997	Reg Cab	No	6.5 Box	5.2L V8	3400	3850	5830		B32214	-	300	300	---	---	---	---	---	---	---	---	---
DAKOTA	4x4	1997	Reg Cab	No	6.5 Box	5.2L V8	3166	3000	5200		B32214	-	300	300	---	---	---	---	---	---	---	---	---
DAKOTA	4x4	1997	Quad Cab	No	6.5 Box	3.9L V6	3400	3850	5900		B32214	-	200	250	---	---	---	---	---	---	---	---	---
DAKOTA	4x4	1997	Quad Cab	No	6.5 Box	3.9L V6	3166	3000	5480		B32214	-	200	200	---	---	---	---	---	---	---	---	---
DAKOTA	4x4	1997	Quad Cab	No	6.5 Box	5.2L V8	3400	3850	5900		B32214	-	250	300	---	---	---	---	---	---	---	---	---
RAM 1500	4x4	1997	Reg Cab	No	6.5 Box	5.2L V8	3850	3600	6400	HB1 use B62221 or B62226	B32037	-	---	---	450	---	---	---	750	---	---	---	---
RAM 1500	4x4	1997	Reg Cab	No	6.5 Box	5.9L V8	3850	3600	6400		B32037	-	---	---	450	---	---	---	---	---	---	---	---
RAM 1500	4x4	1997	Reg Cab	No	8.0 Box	5.2L V8	3850	3600	6400		B32037	-	---	---	450	---	---	---	---	---	---	---	---
RAM 1500	4x4	1997	Reg Cab	No	8.0 Box	5.9L V8	3850	3600	6400		B32037	-	---	---	500	---	---	---	---	---	---	---	---
RAM 2500HD	4x4	1997	Reg Cab	No	8.0 Box	5.9L V8	4850	6085	8800		B32013	-	---	---	---	650	650	650	---	750	900	---	---
RAM 2500HD	4x4	1997	Reg Cab	No	8.0 Box	8.0L V10	4850	6085	8800		B32013	-	---	---	---	650	650	700	---	---	---	---	---
RAM 2500HD	4x4	1997	Quad Cab	No	6.5 Box	5.9L V8	4850	6085	8800		B32013	-	---	---	---	500	500	500	---	600	750	850	---
RAM 2500HD	4x4	1997	Quad Cab	No	8.0 Box	5.9L V8	4850	6085	8800		B32013	-	---	---	---	550	550	600	---	650	800	---	---
RAM 2500HD	4x4	1997	Quad Cab	No	8.0 Box	8.0L V10	4850	6085	8800		B32013	-	---	---	---	400	450	500	---	950	---	---	---
RAM 2500HD	4x4	1997	All	No	Chassis	All	All	All	8501		B32013	-	---	---	---	?	?	?	---	?	?	?	---
RAM 3500	4x4	1997	Reg Cab	Yes	8.0 Box	5.9L V8	4850	7500	10500		B32013	-	---	---	---	---	---	450	---	500	---	---	---
RAM 3500	4x4	1997	Reg Cab	Yes	8.0 Box	8.0L V10	4850	7500	10500		B32013	-	---	---	---	---	---	1000	---	---	---	---	---
RAM 3500	4x4	1997	Quad Cab	Yes	8.0 Box	5.9L V8	4850	7500	11000		B32013	-	---	---	---	---	---	350	---	750	---	---	---
RAM 3500	4x4	1997	All	Yes	Chassis	All	All	All	8501		B32013	-	---	---	---	---	---	?	---	?	?	?	---
RAM 3500	4x2	1997	Reg Cab	Yes	8.0 Box	5.9L V8	4500	7500	10500		B32013	-	---	---	---	---	---	300	---	400	---	---	---
RAM 3500	4x2	1997	Reg Cab	Yes	8.0 Box	8.0L V10	4500	7500	10500		B32013	-	---	---	---	---	---	850	---	---	---	---	---
RAM 3500	4x2	1997	Quad Cab	Yes	8.0 Box	5.9L V8	4500	7500	10500		B32013	-	---	---	---	---	---	250	---	700	---	---	---
RAM 3500	4x2	1997	All	Yes	Chassis	All	All	All	10001		B32013	-	---	---	---	---	---	?	---	?	?	?	---

Notes:

1. Ballast amounts are based on a "Representative Vehicle," defined in the vehicle selection guide instructions, and must be modified for all other configurations for axle and GVWR compliance.
45. Ballast amounts for Model 760LT and 810PP are calculated on reduced plow weights produced after March 2006 (Serial Number 0603 or later). See the weight and dimensional charts at the end of this guide for reduced, current and old plow weights.

2005 to 1997 Ford

													LT			HD			SPEEDWING™		POWER PLOW™		
													680LT	720LT	760LT[45]	760 HD	800 HD	860 HD	760SW	860SW	810PP[45]	8611LP	8611PP
												Blade Width	6'-8"	7'-2"	7'-6"	7'-6"	8'-0"	8'-6"	7'-6"	8'-6"	8'-0" 10'-0"	8'-6" 11'-0"	8'-6" 11'-0"
												Blade Assembly	B0680	B0720	B0761	B0760	B0800	B0860	B0765	B0865	B0810	B0863	B0861
												Joystick Control	B62073								B62109		
												Touchpad Control	B62142								B62141		
Model		Year	Body Style	DRW	Box Option	Engine Type	Min FGAWR	Min RGAWR	Min GVWR	Headlight Conversion Harness	POWER HITCH™ System Under-carriage	POWER HITCH™ System Notes	Ballast Guidelines, lbs (1)										
RANGER	4x4	2005	Reg Cab	No	6.0 Box	3.0L V6	2710	2750	5040	HB5 use B62222	B31142	-	750	---	---	---	---	---	---	---	---	---	---
RANGER	4x4	2005	Super Cab	No	6.0 Box	4.0L V6	2900	2750	5440		B31142	-	700	---	---	---	---	---	---	---	---	---	---
RANGER	4x4	2005	Super Cab	No	6.0 Box	4.0L V6	2900	2750	5320		B31142	-	700	---	---	---	---	---	---	---	---	---	---
RANGER	4x4	2005	Super Cab	No	6.0 Box	4.0L V6	2900	2750	5180		B31142	-	650	---	---	---	---	---	---	---	---	---	---
F150	4x4	2005	Reg Cab	No	8.0 Box	5.4L V8	4300	4800	8200	H13 use n/a	B31184	-	---	---	300	---	---	---	550	---	---	---	---
F150	4x4	2005	Reg Cab	No	8.0 Box	5.4L V8	4050	4800	8200		B31184	-	---	---	950	---	---	---	---	---	---	---	---
F150	4x4	2005	Super Cab	No	8.0 Box	5.4L V8	4300	4800	8200		B31184	-	---	---	850	---	---	---	---	---	---	---	---
F250 SUPER DUTY	4x4	2005	Reg Cab	No	8.0 Box	5.4L V8	5600	6100	9000	H13 use n/a or 2B use B62220	B31219	-	---	---	---	550	550	550	---	650	800	900	---
F250 SUPER DUTY	4x4	2005	Reg Cab	No	8.0 Box	5.4L V8	5200	6100	9000		B31219	-	---	---	---	550	550	550	---	650	---	---	---
F250 SUPER DUTY	4x4	2005	Reg Cab	No	8.0 Box	6.0L D	6000	6100	9200		B31219	-	---	---	---	700	750	750	---	800	1000	---	---
F250 SUPER DUTY	4x4	2005	Reg Cab	No	8.0 Box	6.0L D	5600	6100	9200		B31219	-	---	---	---	700	750	750	---	800	---	---	---
F250 SUPER DUTY	4x4	2005	Reg Cab	No	8.0 Box	6.8L V10	5600	6100	9200		B31219	-	---	---	---	600	600	600	---	700	850	950	---
F250 SUPER DUTY	4x4	2005	Reg Cab	No	8.0 Box	6.8L V10	5200	6100	9200		B31219	-	---	---	---	600	600	600	---	700	---	---	---
F250 SUPER DUTY	4x4	2005	Super Cab	No	6.8 Box	5.4L V8	5600	6100	9200		B31219	-	---	---	---	500	500	550	---	600	750	850	---
F250 SUPER DUTY	4x4	2005	Super Cab	No	6.8 Box	5.4L V8	5200	6100	9200		B31219	-	---	---	---	500	500	550	---	600	---	---	---
F250 SUPER DUTY	4x4	2005	Super Cab	No	6.8 Box	6.0L D	6000	6100	9800		B31219	-	---	---	---	700	700	700	---	800	950	---	---
F250 SUPER DUTY	4x4	2005	Super Cab	No	6.8 Box	6.0L D	5600	6100	9800		B31219	-	---	---	---	700	700	700	---	1000	---	---	---
F250 SUPER DUTY	4x4	2005	Super Cab	No	6.8 Box	6.8L V10	5600	6100	9400		B31219	-	---	---	---	550	550	550	---	650	800	900	---
F250 SUPER DUTY	4x4	2005	Super Cab	No	6.8 Box	6.8L V10	5200	6100	9400		B31219	-	---	---	---	550	550	550	---	850	---	---	---
F250 SUPER DUTY	4x4	2005	Super Cab	No	8.0 Box	5.4L V8	5600	6100	9400		B31219	-	---	---	---	500	500	550	---	600	750	900	---
F250 SUPER DUTY	4x4	2005	Super Cab	No	8.0 Box	5.4L V8	5200	6100	9400		B31219	-	---	---	---	500	500	550	---	900	---	---	---
F250 SUPER DUTY	4x4	2005	Super Cab	No	8.0 Box	6.0L D	6000	6100	10000		B31219	-	---	---	---	700	700	700	---	800	950	---	---
F250 SUPER DUTY	4x4	2005	Super Cab	No	8.0 Box	6.0L D	5600	6100	10000		B31219	-	---	---	---	850	1000	---	---	---	---	---	---
F250 SUPER DUTY	4x4	2005	Super Cab	No	8.0 Box	6.8L V10	5600	6100	9600		B31219	-	---	---	---	550	550	550	---	650	800	---	---
F250 SUPER DUTY	4x4	2005	Super Cab	No	8.0 Box	6.8L V10	5200	6100	9600		B31219	-	---	---	---	650	750	850	---	---	---	---	---
F250 SUPER DUTY	4x4	2005	Crew Cab	No	6.8 Box	5.4L V8	5600	6100	9400		B31219	-	---	---	---	450	500	500	---	550	700	1000	---
F250 SUPER DUTY	4x4	2005	Crew Cab	No	6.8 Box	5.4L V8	5200	6100	9400		B31219	-	---	---	---	450	500	550	---	1000	---	---	---
F250 SUPER DUTY	4x4	2005	Crew Cab	No	6.8 Box	6.0L D	6000	6100	10000		B31219	-	---	---	---	650	650	700	---	750	900	---	---
F250 SUPER DUTY	4x4	2005	Crew Cab	No	6.8 Box	6.0L D	5600	6100	10000		B31219	-	---	---	---	950	---	---	---	---	---	---	---
F250 SUPER DUTY	4x4	2005	Crew Cab	No	6.8 Box	6.8L V10	5600	6100	9600		B31219	-	---	---	---	500	500	550	---	600	750	---	---
F250 SUPER DUTY	4x4	2005	Crew Cab	No	6.8 Box	6.8L V10	5200	6100	9600		B31219	-	---	---	---	750	850	900	---	---	---	---	---

Notes:

1. Ballast amounts are based on a "Representative Vehicle," defined in the vehicle selection guide instructions, and must be modified for all other configurations for axle and GVWR compliance.
45. Ballast amounts for Model 760LT and 810PP are calculated on reduced plow weights produced after March 2006 (Serial Number 0603 or later). See the weight and dimensional charts at the end of this guide for reduced, current and old plow weights.

2005 to 1997 Ford

													LT			HD			SPEEDWING™		POWER PLOW™		
													680LT	720LT	760LT[45]	760 HD	800 HD	860 HD	760SW	860SW	810PP[45]	8611LP	8611PP
												Blade Width	6'-8"	7'-2"	7'-6"	7'-6"	8'-0"	8'-6"	7'-6"	8'-6"	8'-0" 10'-0"	8'-6" 11'-0"	8'-6" 11'-0"
												Blade Assembly	B0680	B0720	B0761	B0760	B0800	B0860	B0765	B0865	B0810	B0863	B0861
												Joystick Control	B62073								B62109		
												Touchpad Control	B62142								B62141		
Model		Year	Body Style	DRW	Box Option	Engine Type	Min FGAWR	Min RGAWR	Min GVWR	Headlight Conversion Harness	POWER HITCH™ System Under-carriage	POWER HITCH™ System Notes	Ballast Guidelines, lbs (1)										
F250 SUPER DUTY	4x4	2005	Crew Cab	No	8.0 Box	5.4L V8	5600	6100	9600	H13 use n/a or 2B use B62220	B31219	-	---	---	---	500	500	500	---	550	700	---	---
F250 SUPER DUTY	4x4	2005	Crew Cab	No	8.0 Box	5.4L V8	5200	6100	9600		B31219	-	---	---	---	900	---	---	---	---	---	---	---
F250 SUPER DUTY	4x4	2005	Crew Cab	No	8.0 Box	6.8L V10	6000	6100	10000		B31219	-	---	---	---	650	700	700	---	750	---	---	---
F250 SUPER DUTY	4x4	2005	Crew Cab	No	8.0 Box	6.8L V10	5600	6100	9800		B31219	-	---	---	---	500	550	550	---	600	---	---	---
F250 SUPER DUTY	4x4	2005	All	No	Chassis	All	All	All	8501		B31219	-	---	---	---	?	?	?	---	?	?	?	---
F350 SUPER DUTY	4x4	2005	Reg Cab	No	8.0 Box	5.4L V8	5600	7000	10500		B31219	-	---	---	---	500	550	550	---	600	800	900	---
F350 SUPER DUTY	4x4	2005	Reg Cab	No	8.0 Box	5.4L V8	5200	7000	10500		B31219	-	---	---	---	500	550	550	---	600	---	---	---
F350 SUPER DUTY	4x4	2005	Reg Cab	No	8.0 Box	6.0L D	6000	7000	11000		B31219	-	---	---	---	700	700	750	---	800	950	---	---
F350 SUPER DUTY	4x4	2005	Reg Cab	No	8.0 Box	6.0L D	5600	7000	11000		B31219	-	---	---	---	700	700	750	---	800	---	---	---
F350 SUPER DUTY	4x4	2005	Reg Cab	No	8.0 Box	6.8L V10	5600	7000	10700		B31219	-	---	---	---	550	600	600	---	650	800	950	---
F350 SUPER DUTY	4x4	2005	Reg Cab	No	8.0 Box	6.8L V10	5200	7000	10700		B31219	-	---	---	---	550	600	600	---	650	---	---	---
F350 SUPER DUTY	4x4	2005	Reg Cab	Yes	8.0 Box	5.4L V8	5600	9000	12000		B31219	-	---	---	---	---	---	400	---	450	600	700	---
F350 SUPER DUTY	4x4	2005	Reg Cab	Yes	8.0 Box	5.4L V8	5200	9000	12000		B31219	-	---	---	---	---	---	400	---	450	---	---	---
F350 SUPER DUTY	4x4	2005	Reg Cab	Yes	8.0 Box	6.0L D	6000	9000	12600		B31219	-	---	---	---	---	---	550	---	600	800	900	---
F350 SUPER DUTY	4x4	2005	Reg Cab	Yes	8.0 Box	6.0L D	5600	9000	12600		B31219	-	---	---	---	---	---	550	---	850	---	---	---
F350 SUPER DUTY	4x4	2005	Reg Cab	Yes	8.0 Box	6.8L V10	5600	9000	12200		B31219	-	---	---	---	---	---	400	---	500	650	750	---
F350 SUPER DUTY	4x4	2005	Reg Cab	Yes	8.0 Box	6.8L V10	5200	9000	12200		B31219	-	---	---	---	---	---	400	---	650	---	---	---
F350 SUPER DUTY	4x4	2005	Super Cab	No	6.8 Box	5.4L V8	5600	7000	10600		B31219	-	---	---	---	500	500	500	---	550	750	850	---
F350 SUPER DUTY	4x4	2005	Super Cab	No	6.8 Box	5.4L V8	5200	7000	10600		B31219	-	---	---	---	500	500	500	---	550	---	---	---
F350 SUPER DUTY	4x4	2005	Super Cab	No	6.8 Box	6.0L D	6000	7000	11200		B31219	-	---	---	---	650	700	700	---	750	900	---	---
F350 SUPER DUTY	4x4	2005	Super Cab	No	6.8 Box	6.0L D	5600	7000	11200		B31219	-	---	---	---	650	700	700	---	---	---	---	---
F350 SUPER DUTY	4x4	2005	Super Cab	No	6.8 Box	6.8L V10	5600	7000	10800		B31219	-	---	---	---	500	550	550	---	600	750	900	---
F350 SUPER DUTY	4x4	2005	Super Cab	No	6.8 Box	6.8L V10	5200	7000	10800		B31219	-	---	---	---	500	550	550	---	850	---	---	---
F350 SUPER DUTY	4x4	2005	Super Cab	No	8.0 Box	5.4L V8	5600	7000	10800		B31219	-	---	---	---	500	500	500	---	550	700	950	---
F350 SUPER DUTY	4x4	2005	Super Cab	No	8.0 Box	5.4L V8	5200	7000	10800		B31219	-	---	---	---	500	500	500	---	950	---	---	---
F350 SUPER DUTY	4x4	2005	Super Cab	No	8.0 Box	6.0L D	6000	7000	11400		B31219	-	---	---	---	650	700	700	---	750	900	---	---
F350 SUPER DUTY	4x4	2005	Super Cab	No	8.0 Box	6.0L D	5600	7000	11400		B31219	-	---	---	---	900	1000	---	---	---	---	---	---
F350 SUPER DUTY	4x4	2005	Super Cab	No	8.0 Box	6.8L V10	5600	7000	11000		B31219	-	---	---	---	500	550	550	---	600	750	---	---
F350 SUPER DUTY	4x4	2005	Super Cab	No	8.0 Box	6.8L V10	5200	7000	11000		B31219	-	---	---	---	700	800	900	---	---	---	---	---
F350 SUPER DUTY	4x4	2005	Super Cab	Yes	8.0 Box	5.4L V8	5600	9000	12400		B31219	-	---	---	---	---	---	350	---	400	550	---	---
F350 SUPER DUTY	4x4	2005	Super Cab	Yes	8.0 Box	5.4L V8	5200	9000	12400		B31219	-	---	---	---	---	---	650	---	---	---	---	---
F350 SUPER DUTY	4x4	2005	Super Cab	Yes	8.0 Box	6.0L D	6000	9000	13000		B31219	-	---	---	---	---	---	500	---	600	850	---	---

Notes:

1. Ballast amounts are based on a "Representative Vehicle," defined in the vehicle selection guide instructions, and must be modified for all other configurations for axle and GVWR compliance.
45. Ballast amounts for Model 760LT and 810PP are calculated on reduced plow weights produced after March 2006 (Serial Number 0603 or later). See the weight and dimensional charts at the end of this guide for reduced, current and old plow weights.

2005 to 1997 Ford

													LT			HD			SPEEDWING™		POWER PLOW™		
													680LT	720LT	760LT[45]	760 HD	800 HD	860 HD	760SW	860SW	810PP[45]	8611LP	8611PP
												Blade Width	6'-8"	7'-2"	7'-6"	7'-6"	8'-0"	8'-6"	7'-6"	8'-6"	8'-0" 10'-0"	8'-6" 11'-0"	8'-6" 11'-0"
												Blade Assembly	B0680	B0720	B0761	B0760	B0800	B0860	B0765	B0865	B0810	B0863	B0861
												Joystick Control	B62073								B62109		
												Touchpad Control	B62142								B62141		
Model		Year	Body Style	DRW	Box Option	Engine Type	Min FGAWR	Min RGAWR	Min GVWR	Headlight Conversion Harness	POWER HITCH™ System Under-carriage	POWER HITCH™ System Notes	Ballast Guidelines, lbs (1)										
F350 SUPER DUTY	4x4	2005	Super Cab	Yes	8.0 Box	6.8L V10	6000	9000	12600	H13 use n/a or 2B use B62220	B31219	-	---	---	---	---	---	350	---	450	600	700	---
F350 SUPER DUTY	4x4	2005	Super Cab	Yes	8.0 Box	6.8L V10	5600	9000	12600		B31219	-	---	---	---	---	---	350	---	450	650	---	---
F350 SUPER DUTY	4x4	2005	Super Cab	Yes	8.0 Box	6.8L V10	5200	9000	12600		B31219	-	---	---	---	---	---	1000	---	---	---	---	---
F350 SUPER DUTY	4x4	2005	Crew Cab	No	6.8 Box	5.4L V8	5600	7000	10800		B31219	-	---	---	---	450	450	450	---	550	700	---	---
F350 SUPER DUTY	4x4	2005	Crew Cab	No	6.8 Box	5.4L V8	5200	7000	10800		B31219	-	---	---	---	450	550	600	---	---	---	---	---
F350 SUPER DUTY	4x4	2005	Crew Cab	No	6.8 Box	6.0L D	6000	7000	11400		B31219	-	---	---	---	650	650	650	---	700	850	---	---
F350 SUPER DUTY	4x4	2005	Crew Cab	No	6.8 Box	6.0L D	5600	7000	11400		B31219	-	---	---	---	1000	---	---	---	---	---	---	---
F350 SUPER DUTY	4x4	2005	Crew Cab	No	6.8 Box	6.8L V10	5600	7000	11000		B31219	-	---	---	---	500	500	500	---	550	700	---	---
F350 SUPER DUTY	4x4	2005	Crew Cab	No	6.8 Box	6.8L V10	5200	7000	11000		B31219	-	---	---	---	800	900	950	---	---	---	---	---
F350 SUPER DUTY	4x4	2005	Crew Cab	No	8.0 Box	5.4L V8	6000	7000	11000		B31219	-	---	---	---	450	450	500	---	550	700	800	---
F350 SUPER DUTY	4x4	2005	Crew Cab	No	8.0 Box	5.4L V8	5600	7000	11000		B31219	-	---	---	---	450	450	500	---	550	700	---	---
F350 SUPER DUTY	4x4	2005	Crew Cab	No	8.0 Box	5.4L V8	5200	7000	11000		B31219	-	---	---	---	950	---	---	---	---	---	---	---
F350 SUPER DUTY	4x4	2005	Crew Cab	No	8.0 Box	6.0L D	6000	7000	11500		B31219	-	---	---	---	650	650	650	---	750	---	---	---
F350 SUPER DUTY	4x4	2005	Crew Cab	No	8.0 Box	6.8L V10	6000	7000	11200		B31219	-	---	---	---	500	500	500	---	600	750	850	---
F350 SUPER DUTY	4x4	2005	Crew Cab	No	8.0 Box	6.8L V10	5600	7000	11200		B31219	-	---	---	---	500	500	500	---	600	---	---	---
F350 SUPER DUTY	4x4	2005	Crew Cab	Yes	6.8 Box	6.0L D	6000	9000	13000		B31219	-	---	---	---	---	---	500	---	550	950	---	---
F350 SUPER DUTY	4x4	2005	Crew Cab	Yes	6.8 Box	6.8L V10	5600	9000	12600		B31219	-	---	---	---	---	---	350	---	400	750	---	---
F350 SUPER DUTY	4x4	2005	Crew Cab	Yes	8.0 Box	6.0L D	6000	9000	13000		B31219	-	---	---	---	---	---	500	---	550	---	---	---
F350 SUPER DUTY	4x4	2005	Crew Cab	Yes	8.0 Box	6.8L V10	6000	9000	12600		B31219	-	---	---	---	---	---	350	---	400	550	650	---
F350 SUPER DUTY	4x4	2005	Crew Cab	Yes	8.0 Box	6.8L V10	5600	9000	12600		B31219	-	---	---	---	---	---	350	---	400	---	---	---
F350 SUPER DUTY	4x4	2005	All	Yes	Chassis	All	All	All	8501		B31219	-	---	---	---	---	---	?	---	?	?	?	---
F350 SUPER DUTY	4x2	2005	Super Cab	No	8.0 Box	5.4L V8	4700	7000	10400		B31219	-	---	---	---	800	950	1000	---	---	---	---	---
F350 SUPER DUTY	4x2	2005	Super Cab	No	8.0 Box	5.4L V8	4700	6830	10400		B31219	-	---	---	---	800	950	1000	---	---	---	---	---
F350 SUPER DUTY	4x2	2005	Super Cab	Yes	8.0 Box	6.8L V10	4850	9000	12400		B31219	-	---	---	---	---	---	800	---	---	---	---	---
F350 SUPER DUTY	4x2	2005	Crew Cab	No	8.0 Box	5.4L V8	4850	7000	10600		B31219	-	---	---	---	650	800	850	---	---	---	---	---
F350 SUPER DUTY	4x2	2005	Crew Cab	No	8.0 Box	5.4L V8	4850	6830	10600		B31219	-	---	---	---	650	800	850	---	---	---	---	---
F350 SUPER DUTY	4x2	2005	All	Yes	Chassis	All	All	All	10001		B31219	-	---	---	---	---	---	?	---	?	?	?	---
F450 SUPER DUTY	4x4	2005	All	Yes	Chassis	All	All	All	8501		B31250	-	---	---	---	---	---	?	---	?	?	?	?
F450 SUPER DUTY	4x2	2005	All	Yes	Chassis	All	All	All	10001		B31250	-	---	---	---	---	---	?	---	?	?	?	?
F550 SUPER DUTY	4x4	2005	All	Yes	Chassis	All	All	All	8501		B31250	-	---	---	---	---	---	?	---	?	?	?	?
F550 SUPER DUTY	4x2	2005	All	Yes	Chassis	All	All	All	10001		B31250	-	---	---	---	---	---	?	---	?	?	?	?

Notes:

1. Ballast amounts are based on a "Representative Vehicle," defined in the vehicle selection guide instructions, and must be modified for all other configurations for axle and GVWR compliance.
45. Ballast amounts for Model 760LT and 810PP are calculated on reduced plow weights produced after March 2006 (Serial Number 0603 or later). See the weight and dimensional charts at the end of this guide for reduced, current and old plow weights.

2005 to 1997 Ford

													LT			HD			SPEEDWING™		POWER PLOW™		
													680LT	720LT	760LT[45]	760 HD	800 HD	860 HD	760SW	860SW	810PP[45]	8611LP	8611PP
												Blade Width	6'-8"	7'-2"	7'-6"	7'-6"	8'-0"	8'-6"	7'-6"	8'-6"	8'-0" 10'-0"	8'-6" 11'-0"	8'-6" 11'-0"
												Blade Assembly	B0680	B0720	B0761	B0760	B0800	B0860	B0765	B0865	B0810	B0863	B0861
												Joystick Control	B62073								B62109		
												Touchpad Control	B62142								B62141		
Model		Year	Body Style	DRW	Box Option	Engine Type	Min FGAWR	Min RGAWR	Min GVWR	Headlight Conversion Harness	POWER HITCH™ System Under-carriage	POWER HITCH™ System Notes	Ballast Guidelines, lbs (1)										
RANGER	4x4	2004	Reg Cab	No	6.0 Box	3.0L V6	2850	2750	5040	HB5 use B62222	B31142	-	300	400	---	---	---	---	---	---	---	---	---
RANGER	4x4	2004	Reg Cab	No	6.0 Box	3.0L V6	2850	2550	4760		B31142	-	300	400	---	---	---	---	---	---	---	---	---
RANGER	4x4	2004	Reg Cab	No	6.0 Box	4.0L V6	2850	2750	5040		B31142	-	500	600	---	---	---	---	---	---	---	---	---
RANGER	4x4	2004	Reg Cab	No	7.0 Box	3.0L V6	2850	2750	5060		B31142	-	350	400	---	---	---	---	---	---	---	---	---
RANGER	4x4	2004	Reg Cab	No	7.0 Box	3.0L V6	2850	2550	4840		B31142	-	350	400	---	---	---	---	---	---	---	---	---
RANGER	4x4	2004	Reg Cab	No	7.0 Box	4.0L V6	2850	2750	5060		B31142	-	500	600	---	---	---	---	---	---	---	---	---
F150	4x4	2004	Reg Cab	No	8.0 Box	5.4L V8	4300	4900	8200	H13 use n/a	B31184	-	---	---	250	---	---	---	700	---	---	---	---
F150	4x4	2004	Reg Cab	No	8.0 Box	5.4L V8	4300	4800	8200		B31184	-	---	---	250	---	---	---	700	---	---	---	---
F150	4x4	2004	Super Cab	No	8.0 Box	5.4L V8	4300	4900	8200		B31184	-	---	---	900	---	---	---	---	---	---	---	---
F150	4x4	2004	Super Cab	No	8.0 Box	5.4L V8	4300	4800	8200		B31184	-	---	---	900	---	---	---	---	---	---	---	---
F150 HERITAGE	4x4	2004	Reg Cab	No	6.5 Box	4.6L V8	3600	3550	6250	HB5 use B62222	B31046	-	---	---	350	---	---	---	---	---	---	---	---
F150 HERITAGE	4x4	2004	Reg Cab	No	8.0 Box	4.2L V6	3600	3550	6050		B31046	-	---	---	350	---	---	---	---	---	---	---	---
F150 HERITAGE	4x4	2004	Reg Cab	No	8.0 Box	4.6L V8	3600	3550	6250		B31046	-	---	---	650	---	---	---	---	---	---	---	---
F150 HERITAGE	4x4	2004	Reg Cab	No	8.0 Box	5.4L V8 BIF	4150	4800	7700		B31046	-	---	---	200	---	---	---	300	---	---	---	---
F150 HERITAGE	4x4	2004	Super Cab	No	6.5 Box	5.4L V8 BIF	4150	4800	7700		B31046	-	---	---	150	---	---	---	400	---	---	---	---
F150 HERITAGE	4x4	2004	Super Cab	No	8.0 Box	4.6L V8	3900	3500	6250		B31046	-	---	---	350	---	---	---	---	---	---	---	---
F250 SUPER DUTY EARLY	4x4	2004	Reg Cab	No	8.0 Box	5.4L V8	5200	6084	8800	2B use B62220 or HB5 use B62222	B31219	7	---	---	---	500	500	550	---	600	750	850	---
F250 SUPER DUTY EARLY	4x4	2004	Reg Cab	No	8.0 Box	5.4L V8	4800	6084	8800		B31219	7	---	---	---	500	500	550	---	800	---	---	---
F250 SUPER DUTY EARLY	4x4	2004	Reg Cab	No	8.0 Box	6.8L V10	5200	6084	8800		B31219	7	---	---	---	550	600	600	---	650	800	---	---
F250 SUPER DUTY EARLY	4x4	2004	Reg Cab	No	8.0 Box	6.8L V10	4800	6084	8800		B31219	7	---	---	---	750	850	900	---	---	---	---	---
F250 SUPER DUTY EARLY	4x4	2004	Super Cab	No	6.8 Box	5.4L V8	5200	6084	8800		B31219	7	---	---	---	450	450	450	---	550	700	---	---
F250 SUPER DUTY EARLY	4x4	2004	Super Cab	No	6.8 Box	5.4L V8	4800	6084	8800		B31219	7	---	---	---	500	600	600	---	1000	---	---	---
F250 SUPER DUTY EARLY	4x4	2004	Super Cab	No	6.8 Box	6.8L V10	5200	6084	8800		B31219	7	---	---	---	500	550	550	---	600	900	---	---
F250 SUPER DUTY EARLY	4x4	2004	Super Cab	No	6.8 Box	6.8L V10	4800	6084	8800		B31219	7	---	---	---	1000	---	---	---	---	---	---	---
F250 SUPER DUTY EARLY	4x4	2004	Super Cab	No	8.0 Box	5.4L V8	5200	6084	8800		B31219	7	---	---	---	450	500	500	---	550	850	---	---
F250 SUPER DUTY EARLY	4x4	2004	Super Cab	No	8.0 Box	6.8L V10	5200	6084	8800		B31219	7	---	---	---	550	550	550	---	600	---	---	---
F250 SUPER DUTY EARLY	4x4	2004	Crew Cab	No	6.8 Box	5.4L V8	5200	6084	8800		B31219	7	---	---	---	400	400	450	---	500	850	---	---
F250 SUPER DUTY EARLY	4x4	2004	Crew Cab	No	6.8 Box	5.4L V8	4800	6084	8800		B31219	7	---	---	---	1000	---	---	---	---	---	---	---
F250 SUPER DUTY EARLY	4x4	2004	Crew Cab	No	6.8 Box	6.8L V10	5200	6084	8800		B31219	7	---	---	---	450	500	500	---	550	---	---	---
F250 SUPER DUTY EARLY	4x4	2004	Crew Cab	No	8.0 Box	5.4L V8	5200	6084	8800		B31219	7	---	---	---	400	450	450	---	500	---	---	---
F250 SUPER DUTY EARLY	4x4	2004	Crew Cab	No	8.0 Box	6.8L V10	5200	6084	8800		B31219	7	---	---	---	500	500	550	---	---	---	---	---

Notes:

1. Ballast amounts are based on a "Representative Vehicle," defined in the vehicle selection guide instructions, and must be modified for all other configurations for axle and GVWR compliance.
7. "EARLY" indicates a build date before 12-01-2003, "LATE" indicates a build date on or after 12-01-2003.
45. Ballast amounts for Model 760LT and 810PP are calculated on reduced plow weights produced after March 2006 (Serial Number 0603 or later). See the weight and dimensional charts at the end of this guide for reduced, current and old plow weights.

2005 to 1997 Ford

													LT			HD			SPEEDWING™		POWER PLOW™		
													680LT	720LT	760LT[45]	760 HD	800 HD	860 HD	760SW	860SW	810PP[45]	8611LP	8611PP
												Blade Width	6'-8"	7'-2"	7'-6"	7'-6"	8'-0"	8'-6"	7'-6"	8'-6"	8'-0" 10'-0"	8'-6" 11'-0"	8'-6" 11'-0"
												Blade Assembly	B0680	B0720	B0761	B0760	B0800	B0860	B0765	B0865	B0810	B0863	B0861
												Joystick Control	B62073								B62109		
												Touchpad Control	B62142								B62141		
Model		Year	Body Style	DRW	Box Option	Engine Type	Min FGAWR	Min RGAWR	Min GVWR	Headlight Conversion Harness	POWER HITCH™ System Under-carriage	POWER HITCH™ System Notes	Ballast Guidelines, lbs (1)										
F250 SUPER DUTY LATE	4x4	2004	Reg Cab	No	8.0 Box	5.4L V8	5200	6084	8800	2B use B62220 or HB5 use B62222	B31219	7	---	---	---	500	500	550	---	600	750	850	---
F250 SUPER DUTY LATE	4x4	2004	Reg Cab	No	8.0 Box	5.4L V8	4800	6084	8800		B31219	7	---	---	---	500	500	550	---	800	---	---	---
F250 SUPER DUTY LATE	4x4	2004	Reg Cab	No	8.0 Box	6.8L V10	5200	6084	8800		B31219	7	---	---	---	550	600	600	---	650	800	---	---
F250 SUPER DUTY LATE	4x4	2004	Reg Cab	No	8.0 Box	6.8L V10	4800	6084	8800		B31219	7	---	---	---	750	850	900	---	---	---	---	---
F250 SUPER DUTY LATE	4x4	2004	Super Cab	No	6.8 Box	5.4L V8	5200	6084	8800		B31219	7	---	---	---	450	450	450	---	550	700	---	---
F250 SUPER DUTY LATE	4x4	2004	Super Cab	No	6.8 Box	5.4L V8	4800	6084	8800		B31219	7	---	---	---	500	600	600	---	1000	---	---	---
F250 SUPER DUTY LATE	4x4	2004	Super Cab	No	6.8 Box	6.8L V10	5200	6084	8800		B31219	7	---	---	---	500	550	550	---	600	900	---	---
F250 SUPER DUTY LATE	4x4	2004	Super Cab	No	6.8 Box	6.8L V10	4800	6084	8800		B31219	7	---	---	---	1000	---	---	---	---	---	---	---
F250 SUPER DUTY LATE	4x4	2004	Super Cab	No	8.0 Box	5.4L V8	5200	6084	8800		B31219	7	---	---	---	450	500	500	---	550	850	---	---
F250 SUPER DUTY LATE	4x4	2004	Super Cab	No	8.0 Box	6.8L V10	5200	6084	8800		B31219	7	---	---	---	550	550	550	---	600	---	---	---
F250 SUPER DUTY LATE	4x4	2004	Crew Cab	No	6.8 Box	5.4L V8	5200	6084	8800		B31219	7	---	---	---	400	400	450	---	500	850	---	---
F250 SUPER DUTY LATE	4x4	2004	Crew Cab	No	6.8 Box	5.4L V8	4800	6084	8800		B31219	7	---	---	---	1000	---	---	---	---	---	---	---
F250 SUPER DUTY LATE	4x4	2004	Crew Cab	No	6.8 Box	6.8L V10	5200	6084	8800		B31219	7	---	---	---	450	500	500	---	550	---	---	---
F250 SUPER DUTY LATE	4x4	2004	Crew Cab	No	8.0 Box	5.4L V8	5200	6084	8800		B31219	7	---	---	---	400	450	450	---	500	---	---	---
F250 SUPER DUTY LATE	4x4	2004	Crew Cab	No	8.0 Box	6.8L V10	5200	6084	8800		B31219	7	---	---	---	500	500	550	---	---	---	---	---
F350 SUPER DUTY EARLY	4x4	2004	Reg Cab	No	8.0 Box	5.4L V8	5200	6830	9900		B31219	7	---	---	---	500	500	550	---	600	750	850	---
F350 SUPER DUTY EARLY	4x4	2004	Reg Cab	No	8.0 Box	5.4L V8	5200	6830	9700		B31219	7	---	---	---	500	500	500	---	600	750	850	---
F350 SUPER DUTY EARLY	4x4	2004	Reg Cab	No	8.0 Box	5.4L V8	4800	6830	9900		B31219	7	---	---	---	500	500	550	---	800	---	---	---
F350 SUPER DUTY EARLY	4x4	2004	Reg Cab	No	8.0 Box	5.4L V8	4800	6830	9700		B31219	7	---	---	---	500	500	500	---	650	---	---	---
F350 SUPER DUTY EARLY	4x4	2004	Reg Cab	No	8.0 Box	6.0L D	5200	6830	9700		B31219	7	---	---	---	1000	---	---	---	---	---	---	---
F350 SUPER DUTY EARLY	4x4	2004	Reg Cab	No	8.0 Box	6.8L V10	5200	6830	9900		B31219	7	---	---	---	550	600	600	---	650	800	---	---
F350 SUPER DUTY EARLY	4x4	2004	Reg Cab	No	8.0 Box	6.8L V10	5200	6830	9700		B31219	7	---	---	---	550	550	600	---	650	800	---	---
F350 SUPER DUTY EARLY	4x4	2004	Reg Cab	No	8.0 Box	6.8L V10	4800	6830	9900		B31219	7	---	---	---	700	850	900	---	---	---	---	---
F350 SUPER DUTY EARLY	4x4	2004	Reg Cab	No	8.0 Box	6.8L V10	4800	6830	9700		B31219	7	---	---	---	600	700	750	---	---	---	---	---
F350 SUPER DUTY EARLY	4x4	2004	Reg Cab	Yes	8.0 Box	5.4L V8	5200	8250	11200		B31219	7	---	---	---	---	---	400	---	450	600	---	---
F350 SUPER DUTY EARLY	4x4	2004	Reg Cab	Yes	8.0 Box	5.4L V8	5200	8250	11000		B31219	7	---	---	---	---	---	400	---	450	---	---	---
F350 SUPER DUTY EARLY	4x4	2004	Reg Cab	Yes	8.0 Box	5.4L V8	4800	8250	11200		B31219	7	---	---	---	---	---	800	---	---	---	---	---
F350 SUPER DUTY EARLY	4x4	2004	Reg Cab	Yes	8.0 Box	6.8L V10	5200	8250	11200		B31219	7	---	---	---	---	---	350	---	450	850	---	---
F350 SUPER DUTY EARLY	4x4	2004	Reg Cab	Yes	8.0 Box	6.8L V10	5200	8250	11000		B31219	7	---	---	---	---	---	350	---	450	---	---	---

Notes:

1. Ballast amounts are based on a "Representative Vehicle," defined in the vehicle selection guide instructions, and must be modified for all other configurations for axle and GVWR compliance.
7. "EARLY" indicates a build date before 12-01-2003, "LATE" indicates a build date on or after 12-01-2003.
45. Ballast amounts for Model 760LT and 810PP are calculated on reduced plow weights produced after March 2006 (Serial Number 0603 or later). See the weight and dimensional charts at the end of this guide for reduced, current and old plow weights.

2005 to 1997 Ford

													LT			HD			SPEEDWING™		POWER PLOW™		
													680LT	720LT	760LT[45]	760 HD	800 HD	860 HD	760SW	860SW	810PP[45]	8611LP	8611PP
												Blade Width	6'-8"	7'-2"	7'-6"	7'-6"	8'-0"	8'-6"	7'-6"	8'-6"	8'-0" 10'-0"	8'-6" 11'-0"	8'-6" 11'-0"
												Blade Assembly	B0680	B0720	B0761	B0760	B0800	B0860	B0765	B0865	B0810	B0863	B0861
												Joystick Control	B62073								B62109		
												Touchpad Control	B62142								B62141		
Model		Year	Body Style	DRW	Box Option	Engine Type	Min FGAWR	Min RGAWR	Min GVWR	Headlight Conversion Harness	POWER HITCH™ System Under-carriage	POWER HITCH™ System Notes	Ballast Guidelines, lbs (1)										
F350 SUPER DUTY EARLY	4x4	2004	Super Cab	No	6.8 Box	5.4L V8	5200	6830	9900	2B use B62220 or HB5 use B62222	B31219	7	---	---	---	450	450	450	---	550	700	1000	---
F350 SUPER DUTY EARLY	4x4	2004	Super Cab	No	6.8 Box	5.4L V8	5200	6830	9700		B31219	7	---	---	---	450	450	450	---	500	650	900	---
F350 SUPER DUTY EARLY	4x4	2004	Super Cab	No	6.8 Box	5.4L V8	4800	6830	9900		B31219	7	---	---	---	450	550	600	---	1000	---	---	---
F350 SUPER DUTY EARLY	4x4	2004	Super Cab	No	6.8 Box	5.4L V8	4800	6830	9700		B31219	7	---	---	---	450	450	500	---	850	---	---	---
F350 SUPER DUTY EARLY	4x4	2004	Super Cab	No	6.8 Box	6.8L V10	5200	6830	9900		B31219	7	---	---	---	500	550	550	---	600	900	---	---
F350 SUPER DUTY EARLY	4x4	2004	Super Cab	No	6.8 Box	6.8L V10	5200	6830	9700		B31219	7	---	---	---	500	500	500	---	600	800	---	---
F350 SUPER DUTY EARLY	4x4	2004	Super Cab	No	6.8 Box	6.8L V10	4800	6830	9900		B31219	7	---	---	---	1000	---	---	---	---	---	---	---
F350 SUPER DUTY EARLY	4x4	2004	Super Cab	No	6.8 Box	6.8L V10	4800	6830	9700		B31219	7	---	---	---	900	1000	1000	---	---	---	---	---
F350 SUPER DUTY EARLY	4x4	2004	Super Cab	No	8.0 Box	5.4L V8	5200	6830	9900		B31219	7	---	---	---	450	500	500	---	550	850	---	---
F350 SUPER DUTY EARLY	4x4	2004	Super Cab	No	8.0 Box	5.4L V8	5200	6830	9700		B31219	7	---	---	---	450	450	500	---	550	700	---	---
F350 SUPER DUTY EARLY	4x4	2004	Super Cab	No	8.0 Box	5.4L V8	4800	6830	9700		B31219	7	---	---	---	900	1000	---	---	---	---	---	---
F350 SUPER DUTY EARLY	4x4	2004	Super Cab	No	8.0 Box	6.8L V10	5200	6830	9900		B31219	7	---	---	---	500	550	550	---	600	---	---	---
F350 SUPER DUTY EARLY	4x4	2004	Super Cab	No	8.0 Box	6.8L V10	5200	6830	9700		B31219	7	---	---	---	500	550	550	---	600	---	---	---
F350 SUPER DUTY EARLY	4x4	2004	Super Cab	Yes	8.0 Box	5.4L V8	5200	8250	11200		B31219	7	---	---	---	---	---	300	---	350	1000	---	---
F350 SUPER DUTY EARLY	4x4	2004	Super Cab	Yes	8.0 Box	5.4L V8	5200	8250	11000		B31219	7	---	---	---	---	---	300	---	600	---	---	---
F350 SUPER DUTY EARLY	4x4	2004	Super Cab	Yes	8.0 Box	6.8L V10	5200	8250	11200		B31219	7	---	---	---	---	---	300	---	650	---	---	---
F350 SUPER DUTY EARLY	4x4	2004	Super Cab	Yes	8.0 Box	6.8L V10	5200	8250	11000		B31219	7	---	---	---	---	---	800	---	---	---	---	---
F350 SUPER DUTY EARLY	4x4	2004	Crew Cab	No	6.8 Box	5.4L V8	5200	6830	9900		B31219	7	---	---	---	400	450	450	---	500	850	---	---
F350 SUPER DUTY EARLY	4x4	2004	Crew Cab	No	6.8 Box	5.4L V8	5200	6830	9700		B31219	7	---	---	---	400	400	400	---	500	700	---	---
F350 SUPER DUTY EARLY	4x4	2004	Crew Cab	No	6.8 Box	5.4L V8	4800	6830	9900		B31219	7	---	---	---	1000	---	---	---	---	---	---	---
F350 SUPER DUTY EARLY	4x4	2004	Crew Cab	No	6.8 Box	5.4L V8	4800	6830	9700		B31219	7	---	---	---	850	950	1000	---	---	---	---	---
F350 SUPER DUTY EARLY	4x4	2004	Crew Cab	No	6.8 Box	6.8L V10	5200	6830	9900		B31219	7	---	---	---	400	450	450	---	500	850	---	---
F350 SUPER DUTY EARLY	4x4	2004	Crew Cab	No	6.8 Box	6.8L V10	5200	6830	9700		B31219	7	---	---	---	400	400	400	---	500	700	---	---
F350 SUPER DUTY EARLY	4x4	2004	Crew Cab	No	6.8 Box	6.8L V10	4800	6830	9900		B31219	7	---	---	---	1000	---	---	---	---	---	---	---
F350 SUPER DUTY EARLY	4x4	2004	Crew Cab	No	6.8 Box	6.8L V10	4800	6830	9700		B31219	7	---	---	---	850	950	1000	---	---	---	---	---
F350 SUPER DUTY EARLY	4x4	2004	Crew Cab	No	8.0 Box	5.4L V8	5200	6830	9900		B31219	7	---	---	---	450	450	450	---	500	---	---	---
F350 SUPER DUTY EARLY	4x4	2004	Crew Cab	No	8.0 Box	5.4L V8	5200	6830	9700		B31219	7	---	---	---	400	450	450	---	500	---	---	---
F350 SUPER DUTY EARLY	4x4	2004	Crew Cab	No	8.0 Box	6.8L V10	5200	6830	9900		B31219	7	---	---	---	500	500	550	---	950	---	---	---
F350 SUPER DUTY EARLY	4x4	2004	Crew Cab	No	8.0 Box	6.8L V10	5200	6830	9700		B31219	7	---	---	---	450	500	500	---	800	---	---	---
F350 SUPER DUTY EARLY	4x4	2004	Crew Cab	Yes	6.8 Box	6.8L V10	5200	8250	11500		B31219	7	---	---	---	---	---	300	---	650	---	---	---
F350 SUPER DUTY EARLY	4x4	2004	Crew Cab	Yes	6.8 Box	6.8L V10	5200	8250	11200		B31219	7	---	---	---	---	---	300	---	650	---	---	---
F350 SUPER DUTY EARLY	4x4	2004	Crew Cab	Yes	6.8 Box	6.8L V10	5200	8250	11000		B31219	7	---	---	---	---	---	300	---	650	---	---	---

Notes:

1. Ballast amounts are based on a "Representative Vehicle," defined in the vehicle selection guide instructions, and must be modified for all other configurations for axle and GVWR compliance.
7. "EARLY" indicates a build date before 12-01-2003, "LATE" indicates a build date on or after 12-01-2003.
45. Ballast amounts for Model 760LT and 810PP are calculated on reduced plow weights produced after March 2006 (Serial Number 0603 or later). See the weight and dimensional charts at the end of this guide for reduced, current and old plow weights.

2005 to 1997 Ford

													LT			HD			SPEEDWING™		POWER PLOW™		
													680LT	720LT	760LT[45]	760 HD	800 HD	860 HD	760SW	860SW	810PP[45]	8611LP	8611PP
												Blade Width	6'-8"	7'-2"	7'-6"	7'-6"	8'-0"	8'-6"	7'-6"	8'-6"	8'-0" 10'-0"	8'-6" 11'-0"	8'-6" 11'-0"
												Blade Assembly	B0680	B0720	B0761	B0760	B0800	B0860	B0765	B0865	B0810	B0863	B0861
												Joystick Control	B62073								B62109		
												Touchpad Control	B62142								B62141		
Model		Year	Body Style	DRW	Box Option	Engine Type	Min FGAWR	Min RGAWR	Min GVWR	Headlight Conversion Harness	POWER HITCH™ System Under-carriage	POWER HITCH™ System Notes	Ballast Guidelines, lbs (1)										
F350 SUPER DUTY EARLY	4x4	2004	Crew Cab	Yes	8.0 Box	6.8L V10	5200	8250	11500	2B use B62220 or HB5 use B62222	B31219	7	---	---	---	---	---	700	---	---	---	---	---
F350 SUPER DUTY EARLY	4x4	2004	Crew Cab	Yes	8.0 Box	6.8L V10	5200	8250	11200		B31219	7	---	---	---	---	---	700	---	---	---	---	---
F350 SUPER DUTY EARLY	4x4	2004	Crew Cab	Yes	8.0 Box	6.8L V10	5200	8250	11000		B31219	7	---	---	---	---	---	700	---	---	---	---	---
F350 SUPER DUTY EARLY	4x4	2004	All	No	Chassis	All	All	All	8501		B31219	7	---	---	---	?	?	?	---	?	?	?	---
F350 SUPER DUTY EARLY	4x4	2004	All	Yes	Chassis	All	All	All	8501		B31219	7	---	---	---	---	---	?	---	?	?	?	---
F350 SUPER DUTY LATE	4x4	2004	Reg Cab	No	8.0 Box	5.4L V8	5200	6830	9900		B31219	7	---	---	---	500	500	550	---	600	750	850	---
F350 SUPER DUTY LATE	4x4	2004	Reg Cab	No	8.0 Box	5.4L V8	5200	6830	9700		B31219	7	---	---	---	500	500	500	---	600	750	850	---
F350 SUPER DUTY LATE	4x4	2004	Reg Cab	No	8.0 Box	5.4L V8	4800	6830	9900		B31219	7	---	---	---	500	500	550	---	800	---	---	---
F350 SUPER DUTY LATE	4x4	2004	Reg Cab	No	8.0 Box	5.4L V8	4800	6830	9700		B31219	7	---	---	---	500	500	500	---	650	---	---	---
F350 SUPER DUTY LATE	4x4	2004	Reg Cab	No	8.0 Box	6.0L D	5200	6830	9700		B31219	7	---	---	---	1000	---	---	---	---	---	---	---
F350 SUPER DUTY LATE	4x4	2004	Reg Cab	No	8.0 Box	6.8L V10	5200	6830	9900		B31219	7	---	---	---	550	600	600	---	650	800	---	---
F350 SUPER DUTY LATE	4x4	2004	Reg Cab	No	8.0 Box	6.8L V10	5200	6830	9700		B31219	7	---	---	---	550	550	600	---	650	800	---	---
F350 SUPER DUTY LATE	4x4	2004	Reg Cab	No	8.0 Box	6.8L V10	4800	6830	9900		B31219	7	---	---	---	700	850	900	---	---	---	---	---
F350 SUPER DUTY LATE	4x4	2004	Reg Cab	No	8.0 Box	6.8L V10	4800	6830	9700		B31219	7	---	---	---	600	700	750	---	---	---	---	---
F350 SUPER DUTY LATE	4x4	2004	Reg Cab	Yes	8.0 Box	5.4L V8	5200	8250	11200		B31219	7	---	---	---	---	---	400	---	450	600	---	---
F350 SUPER DUTY LATE	4x4	2004	Reg Cab	Yes	8.0 Box	5.4L V8	5200	8250	11000		B31219	7	---	---	---	---	---	400	---	450	---	---	---
F350 SUPER DUTY LATE	4x4	2004	Reg Cab	Yes	8.0 Box	5.4L V8	4800	8250	11200		B31219	7	---	---	---	---	---	800	---	---	---	---	---
F350 SUPER DUTY LATE	4x4	2004	Reg Cab	Yes	8.0 Box	6.8L V10	5200	8250	11200		B31219	7	---	---	---	---	---	350	---	450	850	---	---
F350 SUPER DUTY LATE	4x4	2004	Reg Cab	Yes	8.0 Box	6.8L V10	5200	8250	11000		B31219	7	---	---	---	---	---	350	---	450	---	---	---
F350 SUPER DUTY LATE	4x4	2004	Super Cab	No	6.8 Box	5.4L V8	5200	6830	9900		B31219	7	---	---	---	450	450	450	---	550	700	1000	---
F350 SUPER DUTY LATE	4x4	2004	Super Cab	No	6.8 Box	5.4L V8	5200	6830	9700		B31219	7	---	---	---	450	450	450	---	500	650	900	---
F350 SUPER DUTY LATE	4x4	2004	Super Cab	No	6.8 Box	5.4L V8	4800	6830	9900		B31219	7	---	---	---	450	550	600	---	1000	---	---	---
F350 SUPER DUTY LATE	4x4	2004	Super Cab	No	6.8 Box	5.4L V8	4800	6830	9700		B31219	7	---	---	---	450	450	500	---	850	---	---	---
F350 SUPER DUTY LATE	4x4	2004	Super Cab	No	6.8 Box	6.8L V10	5200	6830	9900		B31219	7	---	---	---	500	550	550	---	600	900	---	---
F350 SUPER DUTY LATE	4x4	2004	Super Cab	No	6.8 Box	6.8L V10	5200	6830	9700		B31219	7	---	---	---	500	500	500	---	600	800	---	---
F350 SUPER DUTY LATE	4x4	2004	Super Cab	No	6.8 Box	6.8L V10	4800	6830	9900		B31219	7	---	---	---	1000	---	---	---	---	---	---	---
F350 SUPER DUTY LATE	4x4	2004	Super Cab	No	6.8 Box	6.8L V10	4800	6830	9700		B31219	7	---	---	---	900	1000	1000	---	---	---	---	---
F350 SUPER DUTY LATE	4x4	2004	Super Cab	No	8.0 Box	5.4L V8	5200	6830	9900		B31219	7	---	---	---	450	500	500	---	550	850	---	---
F350 SUPER DUTY LATE	4x4	2004	Super Cab	No	8.0 Box	5.4L V8	5200	6830	9700		B31219	7	---	---	---	450	450	500	---	550	700	---	---
F350 SUPER DUTY LATE	4x4	2004	Super Cab	No	8.0 Box	5.4L V8	4800	6830	9700		B31219	7	---	---	---	900	1000	---	---	---	---	---	---
F350 SUPER DUTY LATE	4x4	2004	Super Cab	No	8.0 Box	6.8L V10	5200	6830	9900		B31219	7	---	---	---	500	550	550	---	600	---	---	---
F350 SUPER DUTY LATE	4x4	2004	Super Cab	No	8.0 Box	6.8L V10	5200	6830	9700		B31219	7	---	---	---	500	550	550	---	600	---	---	---

Notes:

1. Ballast amounts are based on a "Representative Vehicle," defined in the vehicle selection guide instructions, and must be modified for all other configurations for axle and GVWR compliance.
7. "EARLY" indicates a build date before 12-01-2003, "LATE" indicates a build date on or after 12-01-2003.
45. Ballast amounts for Model 760LT and 810PP are calculated on reduced plow weights produced after March 2006 (Serial Number 0603 or later). See the weight and dimensional charts at the end of this guide for reduced, current and old plow weights.

2005 to 1997 Ford

													LT			HD			SPEEDWING™		POWER PLOW™		
													680LT	720LT	760LT[45]	760 HD	800 HD	860 HD	760SW	860SW	810PP[45]	8611LP	8611PP
												Blade Width	6'-8"	7'-2"	7'-6"	7'-6"	8'-0"	8'-6"	7'-6"	8'-6"	8'-0" 10'-0"	8'-6" 11'-0"	8'-6" 11'-0"
												Blade Assembly	B0680	B0720	B0761	B0760	B0800	B0860	B0765	B0865	B0810	B0863	B0861
												Joystick Control	B62073								B62109		
												Touchpad Control	B62142								B62141		
Model		Year	Body Style	DRW	Box Option	Engine Type	Min FGAWR	Min RGAWR	Min GVWR	Headlight Conversion Harness	POWER HITCH™ System Under-carriage	POWER HITCH™ System Notes	Ballast Guidelines, lbs (1)										
F350 SUPER DUTY LATE	4x4	2004	Super Cab	Yes	8.0 Box	5.4L V8	5200	8250	11200	2B use B62220 or HB5 use B62222	B31219	7	---	---	---	---	---	300	---	350	1000	---	---
F350 SUPER DUTY LATE	4x4	2004	Super Cab	Yes	8.0 Box	5.4L V8	5200	8250	11000		B31219	7	---	---	---	---	---	300	---	600	---	---	---
F350 SUPER DUTY LATE	4x4	2004	Super Cab	Yes	8.0 Box	6.8L V10	5200	8250	11200		B31219	7	---	---	---	---	---	300	---	650	---	---	---
F350 SUPER DUTY LATE	4x4	2004	Super Cab	Yes	8.0 Box	6.8L V10	5200	8250	11000		B31219	7	---	---	---	---	---	800	---	---	---	---	---
F350 SUPER DUTY LATE	4x4	2004	Crew Cab	No	6.8 Box	5.4L V8	5200	6830	9900		B31219	7	---	---	---	400	450	450	---	500	850	---	---
F350 SUPER DUTY LATE	4x4	2004	Crew Cab	No	6.8 Box	5.4L V8	5200	6830	9700		B31219	7	---	---	---	400	400	400	---	500	700	---	---
F350 SUPER DUTY LATE	4x4	2004	Crew Cab	No	6.8 Box	5.4L V8	4800	6830	9900		B31219	7	---	---	---	1000	---	---	---	---	---	---	---
F350 SUPER DUTY LATE	4x4	2004	Crew Cab	No	6.8 Box	5.4L V8	4800	6830	9700		B31219	7	---	---	---	850	950	1000	---	---	---	---	---
F350 SUPER DUTY LATE	4x4	2004	Crew Cab	No	6.8 Box	6.8L V10	5200	6830	9900		B31219	7	---	---	---	400	450	450	---	500	850	---	---
F350 SUPER DUTY LATE	4x4	2004	Crew Cab	No	6.8 Box	6.8L V10	5200	6830	9700		B31219	7	---	---	---	400	400	400	---	500	700	---	---
F350 SUPER DUTY LATE	4x4	2004	Crew Cab	No	6.8 Box	6.8L V10	4800	6830	9900		B31219	7	---	---	---	1000	---	---	---	---	---	---	---
F350 SUPER DUTY LATE	4x4	2004	Crew Cab	No	6.8 Box	6.8L V10	4800	6830	9700		B31219	7	---	---	---	850	950	1000	---	---	---	---	---
F350 SUPER DUTY LATE	4x4	2004	Crew Cab	No	8.0 Box	5.4L V8	5200	6830	9900		B31219	7	---	---	---	450	450	450	---	500	---	---	---
F350 SUPER DUTY LATE	4x4	2004	Crew Cab	No	8.0 Box	5.4L V8	5200	6830	9700		B31219	7	---	---	---	400	450	450	---	500	---	---	---
F350 SUPER DUTY LATE	4x4	2004	Crew Cab	No	8.0 Box	6.8L V10	5200	6830	9900		B31219	7	---	---	---	500	500	550	---	950	---	---	---
F350 SUPER DUTY LATE	4x4	2004	Crew Cab	No	8.0 Box	6.8L V10	5200	6830	9700		B31219	7	---	---	---	450	500	500	---	800	---	---	---
F350 SUPER DUTY LATE	4x4	2004	Crew Cab	Yes	6.8 Box	6.8L V10	5200	8250	11500		B31219	7	---	---	---	---	---	300	---	650	---	---	---
F350 SUPER DUTY LATE	4x4	2004	Crew Cab	Yes	6.8 Box	6.8L V10	5200	8250	11200		B31219	7	---	---	---	---	---	300	---	650	---	---	---
F350 SUPER DUTY LATE	4x4	2004	Crew Cab	Yes	6.8 Box	6.8L V10	5200	8250	11000		B31219	7	---	---	---	---	---	300	---	650	---	---	---
F350 SUPER DUTY LATE	4x4	2004	Crew Cab	Yes	8.0 Box	6.8L V10	5200	8250	11500		B31219	7	---	---	---	---	---	700	---	---	---	---	---
F350 SUPER DUTY LATE	4x4	2004	Crew Cab	Yes	8.0 Box	6.8L V10	5200	8250	11200		B31219	7	---	---	---	---	---	700	---	---	---	---	---
F350 SUPER DUTY LATE	4x4	2004	Crew Cab	Yes	8.0 Box	6.8L V10	5200	8250	11000		B31219	7	---	---	---	---	---	700	---	---	---	---	---
F350 SUPER DUTY LATE	4x4	2004	All	No	Chassis	All	All	All	8501		B31219	7	---	---	---	?	?	?	---	?	?	?	---
F350 SUPER DUTY LATE	4x4	2004	All	Yes	Chassis	All	All	All	8501		B31219	7	---	---	---	---	---	?	---	?	?	?	---
F450 SUPER DUTY EARLY	4x4	2004	All	Yes	Chassis	All	All	All	8501		B31250	7	---	---	---	---	---	?	---	?	?	?	?
F450 SUPER DUTY EARLY	4x2	2004	All	Yes	Chassis	All	All	All	10001		B31250	7	---	---	---	---	---	?	---	?	?	?	?
F450 SUPER DUTY LATE	4x4	2004	All	Yes	Chassis	All	All	All	8501		B31250	7	---	---	---	---	---	?	---	?	?	?	?
F450 SUPER DUTY LATE	4x2	2004	All	Yes	Chassis	All	All	All	10001		B31250	7	---	---	---	---	---	?	---	?	?	?	?
F550 SUPER DUTY EARLY	4x4	2004	All	Yes	Chassis	All	All	All	8501		B31250	7	---	---	---	---	---	?	---	?	?	?	?
F550 SUPER DUTY EARLY	4x2	2004	All	Yes	Chassis	All	All	All	10001		B31250	7	---	---	---	---	---	?	---	?	?	?	?
F550 SUPER DUTY LATE	4x4	2004	All	Yes	Chassis	All	All	All	8501		B31250	7	---	---	---	---	---	?	---	?	?	?	?
F550 SUPER DUTY LATE	4x2	2004	All	Yes	Chassis	All	All	All	10001		B31250	7	---	---	---	---	---	?	---	?	?	?	?

Notes:

1. Ballast amounts are based on a "Representative Vehicle," defined in the vehicle selection guide instructions, and must be modified for all other configurations for axle and GVWR compliance.
7. "EARLY" indicates a build date before 12-01-2003, "LATE" indicates a build date on or after 12-01-2003.
45. Ballast amounts for Model 760LT and 810PP are calculated on reduced plow weights produced after March 2006 (Serial Number 0603 or later). See the weight and dimensional charts at the end of this guide for reduced, current and old plow weights.

2005 to 1997 Ford

													LT			HD			SPEEDWING™		POWER PLOW™		
													680LT	720LT	760LT[45]	760 HD	800 HD	860 HD	760SW	860SW	810PP[45]	8611LP	8611PP
												Blade Width	6'-8"	7'-2"	7'-6"	7'-6"	8'-0"	8'-6"	7'-6"	8'-6"	8'-0" 10'-0"	8'-6" 11'-0"	8'-6" 11'-0"
												Blade Assembly	B0680	B0720	B0761	B0760	B0800	B0860	B0765	B0865	B0810	B0863	B0861
												Joystick Control	B62073								B62109		
												Touchpad Control	B62142								B62141		
Model		Year	Body Style	DRW	Box Option	Engine Type	Min FGAWR	Min RGAWR	Min GVWR	Headlight Conversion Harness	POWER HITCH™ System Under-carriage	POWER HITCH™ System Notes	Ballast Guidelines, lbs (1)										
RANGER	4x4	2003	Reg Cab	No	6.0 Box	3.0L V6	2710	2750	5020	HB5 use B62222	B31142	-	750	---	---	---	---	---	---	---	---	---	---
RANGER	4x4	2003	Reg Cab	No	6.0 Box	3.0L V6	2710	2600	5020		B31142	-	750	---	---	---	---	---	---	---	---	---	---
F150	4x4	2003	Reg Cab	No	6.5 Box	4.2L V6	3600	3550	6300		B31046	-	---	---	350	---	---	---	800	---	---	---	---
F150	4x4	2003	Reg Cab	No	6.5 Box	4.2L V6	3600	3550	6250		B31046	-	---	---	350	---	---	---	---	---	---	---	---
F150	4x4	2003	Reg Cab	No	6.5 Box	4.6L V8	3600	3550	6300		B31046	-	---	---	500	---	---	---	---	---	---	---	---
F150	4x4	2003	Reg Cab	No	6.5 Box	4.6L V8	3600	3550	6250		B31046	-	---	---	500	---	---	---	---	---	---	---	---
F150	4x4	2003	Reg Cab	No	6.5 Box	5.4L V8	3600	3550	6300		B31046	-	---	---	650	---	---	---	---	---	---	---	---
F150	4x4	2003	Reg Cab	No	6.5 Box	5.4L V8	3600	3550	6250		B31046	-	---	---	650	---	---	---	---	---	---	---	---
F150	4x4	2003	Reg Cab	No	8.0 Box	5.4L V8	4150	4800	7700		B31046	-	---	---	350	---	---	---	450	---	---	---	---
F150	4x4	2003	Super Cab	No	6.5 Box	5.4L V8	4150	4800	7700		B31046	-	---	---	250	---	---	---	350	---	---	---	---
F250 SUPER DUTY	4x4	2003	Reg Cab	No	8.0 Box	5.4L V8	5200	6084	8800	2B use B62220 or HB5 use B62222	B31219	-	---	---	---	500	550	550	---	600	750	900	---
F250 SUPER DUTY	4x4	2003	Reg Cab	No	8.0 Box	5.4L V8	4800	6084	8800		B31219	-	---	---	---	500	550	550	---	850	---	---	---
F250 SUPER DUTY	4x4	2003	Reg Cab	No	8.0 Box	6.8L V10	5200	6084	8800		B31219	-	---	---	---	550	600	600	---	650	850	---	---
F250 SUPER DUTY	4x4	2003	Reg Cab	No	8.0 Box	6.8L V10	4800	6084	8800		B31219	-	---	---	---	800	900	950	---	---	---	---	---
F250 SUPER DUTY	4x4	2003	Reg Cab	No	8.0 Box	7.3L D	5200	6084	8800		B31219	-	---	---	---	1000	---	---	---	---	---	---	---
F250 SUPER DUTY	4x4	2003	Super Cab	No	6.8 Box	5.4L V8	5200	6084	8800		B31219	-	---	---	---	450	450	500	---	550	700	---	---
F250 SUPER DUTY	4x4	2003	Super Cab	No	6.8 Box	5.4L V8	4800	6084	8800		B31219	-	---	---	---	500	600	650	---	---	---	---	---
F250 SUPER DUTY	4x4	2003	Super Cab	No	6.8 Box	6.8L V10	5200	6084	8800		B31219	-	---	---	---	500	550	550	---	600	950	---	---
F250 SUPER DUTY	4x4	2003	Super Cab	No	8.0 Box	5.4L V8	5200	6084	8800		B31219	-	---	---	---	450	500	500	---	550	900	---	---
F250 SUPER DUTY	4x4	2003	Super Cab	No	8.0 Box	6.8L V10	5200	6084	8800		B31219	-	---	---	---	550	550	550	---	650	---	---	---
F250 SUPER DUTY	4x4	2003	Crew Cab	No	6.8 Box	5.4L V8	5200	6084	8800		B31219	-	---	---	---	450	450	450	---	500	1000	---	---
F250 SUPER DUTY	4x4	2003	Crew Cab	No	6.8 Box	6.8L V10	5200	6084	8800		B31219	-	---	---	---	500	500	500	---	600	---	---	---
F250 SUPER DUTY	4x4	2003	Crew Cab	No	8.0 Box	5.4L V8	5200	6084	8800		B31219	-	---	---	---	450	450	450	---	550	---	---	---
F250 SUPER DUTY	4x4	2003	Crew Cab	No	8.0 Box	6.8L V10	5200	6084	8800		B31219	-	---	---	---	500	600	650	---	---	---	---	---
F250 SUPER DUTY	4x4	2003	All	No	Chassis	All	All	All	8501		B31219	-	---	---	---	?	?	?	---	?	?	?	---
F350 SUPER DUTY	4x4	2003	Reg Cab	No	8.0 Box	5.4L V8	5200	6830	9900		B31219	-	---	---	---	500	550	550	---	600	750	900	---
F350 SUPER DUTY	4x4	2003	Reg Cab	No	8.0 Box	5.4L V8	4800	6830	9900		B31219	-	---	---	---	500	550	550	---	850	---	---	---
F350 SUPER DUTY	4x4	2003	Reg Cab	No	8.0 Box	6.8L V10	5200	6830	9900		B31219	-	---	---	---	550	600	600	---	650	800	---	---
F350 SUPER DUTY	4x4	2003	Reg Cab	No	8.0 Box	6.8L V10	4800	6830	9900		B31219	-	---	---	---	850	950	1000	---	---	---	---	---
F350 SUPER DUTY	4x4	2003	Reg Cab	No	8.0 Box	7.3L D	5200	6830	9900		B31219	-	---	---	---	950	---	---	---	---	---	---	---
F350 SUPER DUTY	4x4	2003	Reg Cab	Yes	8.0 Box	5.4L V8	5200	8250	11200		B31219	-	---	---	---	---	---	350	---	450	600	---	---
F350 SUPER DUTY	4x4	2003	Reg Cab	Yes	8.0 Box	5.4L V8	4800	8250	11200		B31219	-	---	---	---	---	---	550	---	1000	---	---	---
F350 SUPER DUTY	4x4	2003	Reg Cab	Yes	8.0 Box	6.8L V10	5200	8250	11200		B31219	-	---	---	---	---	---	400	---	450	900	---	---

Notes:

1. Ballast amounts are based on a "Representative Vehicle," defined in the vehicle selection guide instructions, and must be modified for all other configurations for axle and GVWR compliance.
45. Ballast amounts for Model 760LT and 810PP are calculated on reduced plow weights produced after March 2006 (Serial Number 0603 or later). See the weight and dimensional charts at the end of this guide for reduced, current and old plow weights.

2005 to 1997 Ford

													LT			HD			SPEEDWING™		POWER PLOW™		
													680LT	720LT	760LT[45]	760 HD	800 HD	860 HD	760SW	860SW	810PP[45]	8611LP	8611PP
												Blade Width	6'-8"	7'-2"	7'-6"	7'-6"	8'-0"	8'-6"	7'-6"	8'-6"	8'-0" 10'-0"	8'-6" 11'-0"	8'-6" 11'-0"
												Blade Assembly	B0680	B0720	B0761	B0760	B0800	B0860	B0765	B0865	B0810	B0863	B0861
												Joystick Control	B62073								B62109		
												Touchpad Control	B62142								B62141		
Model		Year	Body Style	DRW	Box Option	Engine Type	Min FGAWR	Min RGAWR	Min GVWR	Headlight Conversion Harness	POWER HITCH™ System Under-carriage	POWER HITCH™ System Notes	Ballast Guidelines, lbs (1)										
F350 SUPER DUTY	4x4	2003	Super Cab	No	6.8 Box	5.4L V8	5200	6830	9900	2B use B62220 or HB5 use B62222	B31219	-	---	---	---	450	450	500	---	550	700	---	---
F350 SUPER DUTY	4x4	2003	Super Cab	No	6.8 Box	5.4L V8	4800	6830	9900		B31219	-	---	---	---	500	600	650	---	---	---	---	---
F350 SUPER DUTY	4x4	2003	Super Cab	No	6.8 Box	6.8L V10	5200	6830	9900		B31219	-	---	---	---	500	550	550	---	600	950	---	---
F350 SUPER DUTY	4x4	2003	Super Cab	No	8.0 Box	5.4L V8	5200	6830	9900		B31219	-	---	---	---	450	500	500	---	550	900	---	---
F350 SUPER DUTY	4x4	2003	Super Cab	No	8.0 Box	6.8L V10	5200	6830	9900		B31219	-	---	---	---	550	550	550	---	600	---	---	---
F350 SUPER DUTY	4x4	2003	Super Cab	Yes	8.0 Box	5.4L V8	5200	8250	11200		B31219	-	---	---	---	---	---	350	---	400	---	---	---
F350 SUPER DUTY	4x4	2003	Super Cab	Yes	8.0 Box	6.8L V10	5200	8250	11200		B31219	-	---	---	---	---	---	350	---	650	---	---	---
F350 SUPER DUTY	4x4	2003	Crew Cab	No	6.8 Box	5.4L V8	5200	6830	9900		B31219	-	---	---	---	450	450	450	---	500	1000	---	---
F350 SUPER DUTY	4x4	2003	Crew Cab	No	6.8 Box	6.8L V10	5200	6830	9900		B31219	-	---	---	---	500	500	500	---	600	---	---	---
F350 SUPER DUTY	4x4	2003	Crew Cab	No	8.0 Box	5.4L V8	5200	6830	9900		B31219	-	---	---	---	450	450	450	---	550	---	---	---
F350 SUPER DUTY	4x4	2003	Crew Cab	No	8.0 Box	6.8L V10	5200	6830	9900		B31219	-	---	---	---	500	550	650	---	---	---	---	---
F350 SUPER DUTY	4x4	2003	Crew Cab	Yes	6.8 Box	6.8L V10	5200	8250	11200		B31219	-	---	---	---	---	---	350	---	750	---	---	---
F350 SUPER DUTY	4x4	2003	Crew Cab	Yes	8.0 Box	6.8L V10	5200	8250	11200		B31219	-	---	---	---	---	---	750	---	---	---	---	---
F350 SUPER DUTY	4x4	2003	All	No	Chassis	All	All	All	8501		B31219	-	---	---	---	?	?	?	---	?	?	?	---
F350 SUPER DUTY	4x4	2003	All	Yes	Chassis	All	All	All	8501		B31219	-	---	---	---	---	---	?	---	?	?	?	---
F350 SUPER DUTY	4x2	2003	Reg Cab	Yes	8.0 Box	5.4L V8	4850	8250	11200		B31219	-	---	---	---	---	---	300	---	400	550	---	---
F350 SUPER DUTY	4x2	2003	Reg Cab	Yes	8.0 Box	5.4L V8	4550	8250	11200		B31219	-	---	---	---	---	---	300	---	600	---	---	---
F350 SUPER DUTY	4x2	2003	Reg Cab	Yes	8.0 Box	5.4L V8	4400	8250	11200		B31219	-	---	---	---	---	---	800	---	---	---	---	---
F350 SUPER DUTY	4x2	2003	Reg Cab	Yes	8.0 Box	6.8L V10	4850	8250	11200		B31219	-	---	---	---	---	---	300	---	400	900	---	---
F350 SUPER DUTY	4x2	2003	Reg Cab	Yes	8.0 Box	6.8L V10	4550	8250	11200		B31219	-	---	---	---	---	---	750	---	---	---	---	---
F350 SUPER DUTY	4x2	2003	Super Cab	Yes	8.0 Box	5.4L V8	4850	8250	11200		B31219	-	---	---	---	---	---	250	---	300	---	---	---
F350 SUPER DUTY	4x2	2003	Super Cab	Yes	8.0 Box	5.4L V8	4550	8250	11200		B31219	-	---	---	---	---	---	950	---	---	---	---	---
F350 SUPER DUTY	4x2	2003	Super Cab	Yes	8.0 Box	6.8L V10	4850	8250	11200		B31219	-	---	---	---	---	---	250	---	650	---	---	---
F350 SUPER DUTY	4x2	2003	Crew Cab	Yes	6.8 Box	6.8L V10	4850	8250	11200		B31219	-	---	---	---	---	---	300	---	800	---	---	---
F350 SUPER DUTY	4x2	2003	Crew Cab	Yes	8.0 Box	6.8L V10	4850	8250	11200		B31219	-	---	---	---	---	---	750	---	---	---	---	---
F450 SUPER DUTY	4x4	2003	All	Yes	Chassis	All	All	All	8501		B31250	-	---	---	---	---	---	?	---	?	?	?	?
F450 SUPER DUTY	4x2	2003	All	Yes	Chassis	All	All	All	10001		B31250	-	---	---	---	---	---	?	---	?	?	?	?
F550 SUPER DUTY	4x4	2003	All	Yes	Chassis	All	All	All	8501		B31250	-	---	---	---	---	---	?	---	?	?	?	?
F550 SUPER DUTY	4x2	2003	All	Yes	Chassis	All	All	All	10001		B31250	-	---	---	---	---	---	?	---	?	?	?	?

Notes:

1. Ballast amounts are based on a "Representative Vehicle," defined in the vehicle selection guide instructions, and must be modified for all other configurations for axle and GVWR compliance.
45. Ballast amounts for Model 760LT and 810PP are calculated on reduced plow weights produced after March 2006 (Serial Number 0603 or later). See the weight and dimensional charts at the end of this guide for reduced, current and old plow weights.

2005 to 1997 Ford

													LT			HD			SPEEDWING™		POWER PLOW™		
													680LT	720LT	760LT[45]	760 HD	800 HD	860 HD	760SW	860SW	810PP[45]	8611LP	8611PP
												Blade Width	6'-8"	7'-2"	7'-6"	7'-6"	8'-0"	8'-6"	7'-6"	8'-6"	8'-0" 10'-0"	8'-6" 11'-0"	8'-6" 11'-0"
												Blade Assembly	B0680	B0720	B0761	B0760	B0800	B0860	B0765	B0865	B0810	B0863	B0861
												Joystick Control	B62073								B62109		
												Touchpad Control	B62142								B62141		
Model		Year	Body Style	DRW	Box Option	Engine Type	Min FGAWR	Min RGAWR	Min GVWR	Headlight Conversion Harness	POWER HITCH™ System Under-carriage	POWER HITCH™ System Notes	Ballast Guidelines, lbs (1)										
RANGER	4x4	2002	Reg Cab	No	6.0 Box	3.0L V6	2710	2750	4980	HB5 use B62222	B31142	-	600	650	---	---	---	---	---	---	---	---	---
RANGER	4x4	2002	Reg Cab	No	7.0 Box	3.0L V6	2710	2750	5020		B31142	-	650	---	---	---	---	---	---	---	---	---	---
RANGER	4x4	2002	Super Cab	No	6.0 Box	3.0L V6	2850	2750	5100		B31142	-	500	550	---	---	---	---	---	---	---	---	---
RANGER	4x4	2002	Super Cab	No	6.0 Box	3.0L V6	2850	2600	4940		B31142	-	500	550	---	---	---	---	---	---	---	---	---
F150	4x4	2002	Reg Cab	No	6.5 Box	4.6L V8	3600	3550	6250		B31046	-	---	---	400	---	---	---	---	---	---	---	---
F150	4x4	2002	Reg Cab	No	6.5 Box	5.4L V8	3600	3550	6300		B31046	-	---	---	600	---	---	---	---	---	---	---	---
F150	4x4	2002	Reg Cab	No	8.0 Box	4.2L V6	3600	3550	6000		B31046	-	---	---	500	---	---	---	---	---	---	---	---
F150	4x4	2002	Reg Cab	No	8.0 Box	5.4L V8	4150	4800	7700		B31046	-	---	---	350	---	---	---	450	---	---	---	---
F150	4x4	2002	Super Cab	No	8.0 Box	5.4L V8	4150	4800	7700		B31046	-	---	---	300	---	---	---	400	---	---	---	---
F250 SUPER DUTY	4x4	2002	Reg Cab	No	8.0 Box	5.4L V8	4800	6830	8800	2B use B62220 or HB5 use B62222	B31219	-	---	---	---	500	550	550	---	850	---	---	---
F250 SUPER DUTY	4x4	2002	Reg Cab	No	8.0 Box	6.8L V10	4800	6830	8800		B31219	-	---	---	---	800	900	950	---	---	---	---	---
F250 SUPER DUTY	4x4	2002	Reg Cab	No	8.0 Box	7.3L D	5200	6830	8800		B31219	-	---	---	---	1000	---	---	---	---	---	---	---
F250 SUPER DUTY	4x4	2002	Super Cab	No	6.8 Box	5.4L V8	4800	6830	8800		B31219	-	---	---	---	600	700	750	---	---	---	---	---
F250 SUPER DUTY	4x4	2002	Super Cab	No	8.0 Box	5.4L V8	5200	6830	8800		B31219	-	---	---	---	450	500	500	---	550	900	---	---
F250 SUPER DUTY	4x4	2002	Super Cab	No	8.0 Box	6.8L V10	5200	6830	8800		B31219	-	---	---	---	550	550	550	---	600	---	---	---
F250 SUPER DUTY	4x4	2002	Crew Cab	No	6.8 Box	5.4L V8	5200	6084	8800		B31219	-	---	---	---	450	450	450	---	500	950	---	---
F250 SUPER DUTY	4x4	2002	Crew Cab	No	6.8 Box	6.8L V10	5200	6084	8800		B31219	-	---	---	---	500	500	500	---	600	---	---	---
F250 SUPER DUTY	4x4	2002	Crew Cab	No	8.0 Box	5.4L V8	5200	6084	8800		B31219	-	---	---	---	450	450	450	---	550	---	---	---
F250 SUPER DUTY	4x4	2002	Crew Cab	No	8.0 Box	6.8L V10	5200	6084	8800		B31219	-	---	---	---	500	550	600	---	---	---	---	---
F250 SUPER DUTY	4x4	2002	All	No	Chassis	All	All	All	8501		B31219	-	---	---	---	?	?	?	---	?	?	?	---
F350 SUPER DUTY	4x4	2002	Reg Cab	No	8.0 Box	5.4L V8	5200	6830	9900		B31219	-	---	---	---	500	500	550	---	600	750	850	---
F350 SUPER DUTY	4x4	2002	Reg Cab	No	8.0 Box	5.4L V8	4800	6830	9900		B31219	-	---	---	---	500	500	550	---	850	---	---	---
F350 SUPER DUTY	4x4	2002	Reg Cab	No	8.0 Box	6.8L V10	5200	6830	9900		B31219	-	---	---	---	550	600	600	---	650	800	---	---
F350 SUPER DUTY	4x4	2002	Reg Cab	No	8.0 Box	6.8L V10	4800	6830	9900		B31219	-	---	---	---	800	900	900	---	---	---	---	---
F350 SUPER DUTY	4x4	2002	Reg Cab	No	8.0 Box	7.3L D	5200	6830	9900		B31219	-	---	---	---	900	1000	---	---	---	---	---	---
F350 SUPER DUTY	4x4	2002	Reg Cab	Yes	8.0 Box	5.4L V8	5200	8250	11200		B31219	-	---	---	---	---	---	700	---	750	900	---	---
F350 SUPER DUTY	4x4	2002	Reg Cab	Yes	8.0 Box	5.4L V8	4800	8250	11200		B31219	-	---	---	---	---	---	700	---	750	---	---	---
F350 SUPER DUTY	4x4	2002	Reg Cab	Yes	8.0 Box	6.8L V10	5200	8250	11200		B31219	-	---	---	---	---	---	700	---	800	950	---	---
F350 SUPER DUTY	4x4	2002	Reg Cab	Yes	8.0 Box	6.8L V10	4800	8250	11200		B31219	-	---	---	---	---	---	800	---	---	---	---	---
F350 SUPER DUTY	4x4	2002	Reg Cab	Yes	8.0 Box	7.3L D	5200	8250	11500		B31219	-	---	---	---	---	---	850	---	---	---	---	---

Notes:

1. Ballast amounts are based on a "Representative Vehicle," defined in the vehicle selection guide instructions, and must be modified for all other configurations for axle and GVWR compliance.
45. Ballast amounts for Model 760LT and 810PP are calculated on reduced plow weights produced after March 2006 (Serial Number 0603 or later). See the weight and dimensional charts at the end of this guide for reduced, current and old plow weights.

2005 to 1997 Ford

													LT			HD			SPEEDWING™		POWER PLOW™		
													680LT	720LT	760LT[45]	760 HD	800 HD	860 HD	760SW	860SW	810PP[45]	8611LP	8611PP
												Blade Width	6'-8"	7'-2"	7'-6"	7'-6"	8'-0"	8'-6"	7'-6"	8'-6"	8'-0" 10'-0"	8'-6" 11'-0"	8'-6" 11'-0"
												Blade Assembly	B0680	B0720	B0761	B0760	B0800	B0860	B0765	B0865	B0810	B0863	B0861
												Joystick Control	B62073								B62109		
												Touchpad Control	B62142								B62141		
Model		Year	Body Style	DRW	Box Option	Engine Type	Min FGAWR	Min RGAWR	Min GVWR	Headlight Conversion Harness	POWER HITCH™ System Under-carriage	POWER HITCH™ System Notes	Ballast Guidelines, lbs (1)										
F350 SUPER DUTY	4x4	2002	Super Cab	No	6.8 Box	5.4L V8	5200	6830	9900	2B use B62220 or HB5 use B62222	B31219	-	---	---	---	500	500	500	---	600	750	---	---
F350 SUPER DUTY	4x4	2002	Super Cab	No	6.8 Box	5.4L V8	4800	6830	9900		B31219	-	---	---	---	550	650	700	---	---	---	---	---
F350 SUPER DUTY	4x4	2002	Super Cab	No	6.8 Box	6.8L V10	5200	6830	9900		B31219	-	---	---	---	550	550	600	---	650	1000	---	---
F350 SUPER DUTY	4x4	2002	Super Cab	No	8.0 Box	5.4L V8	5200	6830	9900		B31219	-	---	---	---	450	450	500	---	550	900	---	---
F350 SUPER DUTY	4x4	2002	Super Cab	No	8.0 Box	5.4L V8	4800	6830	9900		B31219	-	---	---	---	1000	---	---	---	---	---	---	---
F350 SUPER DUTY	4x4	2002	Super Cab	No	8.0 Box	6.8L V10	5200	6830	9900		B31219	-	---	---	---	500	550	550	---	600	---	---	---
F350 SUPER DUTY	4x4	2002	Super Cab	Yes	8.0 Box	5.4L V8	5200	8250	11200		B31219	-	---	---	---	---	---	350	---	400	950	---	---
F350 SUPER DUTY	4x4	2002	Super Cab	Yes	8.0 Box	6.8L V10	5200	8250	11200		B31219	-	---	---	---	---	---	350	---	650	---	---	---
F350 SUPER DUTY	4x4	2002	Crew Cab	No	6.8 Box	5.4L V8	5200	6830	9900		B31219	-	---	---	---	450	450	450	---	500	900	---	---
F350 SUPER DUTY	4x4	2002	Crew Cab	No	6.8 Box	6.8L V10	5200	6830	9900		B31219	-	---	---	---	500	500	500	---	600	---	---	---
F350 SUPER DUTY	4x4	2002	Crew Cab	No	8.0 Box	5.4L V8	5200	6830	9900		B31219	-	---	---	---	450	450	450	---	500	---	---	---
F350 SUPER DUTY	4x4	2002	Crew Cab	No	8.0 Box	6.8L V10	5200	6830	9900		B31219	-	---	---	---	500	500	550	---	1000	---	---	---
F350 SUPER DUTY	4x4	2002	Crew Cab	Yes	6.8 Box	6.8L V10	5200	8250	11200		B31219	-	---	---	---	---	---	350	---	650	---	---	---
F350 SUPER DUTY	4x4	2002	Crew Cab	Yes	8.0 Box	6.8L V10	5200	8250	11200		B31219	-	---	---	---	---	---	950	---	---	---	---	---
F350 SUPER DUTY	4x4	2002	All	No	Chassis	All	All	All	8501		B31219	-	---	---	---	?	?	?	---	?	?	?	---
F350 SUPER DUTY	4x4	2002	All	Yes	Chassis	All	All	All	8501		B31219	-	---	---	---	---	---	?	---	?	?	?	---
F450 SUPER DUTY	4x4	2002	All	Yes	Chassis	All	All	All	8501		B31250	-	---	---	---	---	---	?	---	?	?	?	?
F450 SUPER DUTY	4x2	2002	All	Yes	Chassis	All	All	All	10001		B31250	-	---	---	---	---	---	?	---	?	?	?	?
F550 SUPER DUTY	4x4	2002	All	Yes	Chassis	All	All	All	8501		B31250	-	---	---	---	---	---	?	---	?	?	?	?
F550 SUPER DUTY	4x2	2002	All	Yes	Chassis	All	All	All	10001		B31250	-	---	---	---	---	---	?	---	?	?	?	?
RANGER	4x4	2001	Reg Cab	No	6.0 Box	3.0L V6	2710	2750	4980	HB5 use B62222	B31142	-	750	---	---	---	---	---	---	---	---	---	---
RANGER	4x4	2001	Reg Cab	No	6.0 Box	3.0L V6	2710	2600	4980		B31142	-	750	---	---	---	---	---	---	---	---	---	---
RANGER	4x4	2001	Reg Cab	No	7.0 Box	3.0L V6	2710	2750	5020		B31142	-	650	---	---	---	---	---	---	---	---	---	---
RANGER	4x4	2001	Reg Cab	No	7.0 Box	3.0L V6	2710	2600	5020		B31142	-	650	---	---	---	---	---	---	---	---	---	---
RANGER	4x4	2001	Super Cab	No	6.0 Box	3.0L V6	2850	2750	5140		B31142	-	650	---	---	---	---	---	---	---	---	---	---
RANGER	4x4	2001	Super Cab	No	6.0 Box	3.0L V6	2850	2750	5080		B31142	-	650	---	---	---	---	---	---	---	---	---	---

Notes:

1. Ballast amounts are based on a "Representative Vehicle," defined in the vehicle selection guide instructions, and must be modified for all other configurations for axle and GVWR compliance.
45. Ballast amounts for Model 760LT and 810PP are calculated on reduced plow weights produced after March 2006 (Serial Number 0603 or later). See the weight and dimensional charts at the end of this guide for reduced, current and old plow weights.

2005 to 1997 Ford

													LT			HD			SPEEDWING™		POWER PLOW™		
													680LT	720LT	760LT[45]	760 HD	800 HD	860 HD	760SW	860SW	810PP[45]	8611LP	8611PP
												Blade Width	6'-8"	7'-2"	7'-6"	7'-6"	8'-0"	8'-6"	7'-6"	8'-6"	8'-0" 10'-0"	8'-6" 11'-0"	8'-6" 11'-0"
												Blade Assembly	B0680	B0720	B0761	B0760	B0800	B0860	B0765	B0865	B0810	B0863	B0861
												Joystick Control	B62073								B62109		
												Touchpad Control	B62142								B62141		
Model		Year	Body Style	DRW	Box Option	Engine Type	Min FGAWR	Min RGAWR	Min GVWR	Headlight Conversion Harness	POWER HITCH™ System Under-carriage	POWER HITCH™ System Notes	Ballast Guidelines, lbs (1)										
F150	4x4	2001	Reg Cab	No	6.5 Box	4.2L V6	3680	3550	6000	HB5 use B62222	B31046	-	---	---	350	---	---	---	450	---	---	---	---
F150	4x4	2001	Reg Cab	No	6.5 Box	4.2L V6	3660	3550	6000		B31046	-	---	---	350	---	---	---	500	---	---	---	---
F150	4x4	2001	Reg Cab	No	6.5 Box	4.6L V8	3680	3550	6250		B31046	-	---	---	400	---	---	---	---	---	---	---	---
F150	4x4	2001	Reg Cab	No	6.5 Box	4.6L V8	3680	3550	6000		B31046	-	---	---	350	---	---	---	---	---	---	---	---
F150	4x4	2001	Reg Cab	No	6.5 Box	4.6L V8	3660	3550	6250		B31046	-	---	---	400	---	---	---	---	---	---	---	---
F150	4x4	2001	Reg Cab	No	6.5 Box	4.6L V8	3660	3550	6000		B31046	-	---	---	350	---	---	---	---	---	---	---	---
F150	4x4	2001	Reg Cab	No	6.5 Box	5.4L V8	3680	3550	6300		B31046	-	---	---	450	---	---	---	---	---	---	---	---
F150	4x4	2001	Reg Cab	No	6.5 Box	5.4L V8	3660	3550	6300		B31046	-	---	---	500	---	---	---	---	---	---	---	---
F150	4x4	2001	Reg Cab	No	8.0 Box	4.2L V6	3680	3550	6000		B31046	-	---	---	400	---	---	---	---	---	---	---	---
F150	4x4	2001	Reg Cab	No	8.0 Box	4.2L V6	3660	3550	6000		B31046	-	---	---	400	---	---	---	---	---	---	---	---
F150	4x4	2001	Reg Cab	No	8.0 Box	4.6L V8	3680	3550	6250		B31046	-	---	---	600	---	---	---	---	---	---	---	---
F150	4x4	2001	Reg Cab	No	8.0 Box	4.6L V8	3660	3550	6250		B31046	-	---	---	700	---	---	---	---	---	---	---	---
F150	4x4	2001	Reg Cab	No	8.0 Box	5.4L V8	4150	4800	7700		B31046	-	---	---	300	---	---	---	400	---	---	---	---
F150	4x4	2001	Super Cab	No	6.5 Box	5.4L V8	4150	4800	7700		B31046	-	---	---	300	---	---	---	350	---	---	---	---
F250 SUPER DUTY	4x4	2001	Reg Cab	No	8.0 Box	5.4L V8	5200	6084	8800	2B use B62220 or HB5 use B62222	B31219	-	---	---	---	600	600	600	---	700	850	950	---
F250 SUPER DUTY	4x4	2001	Reg Cab	No	8.0 Box	5.4L V8	4800	6084	8800		B31219	-	---	---	---	600	600	600	---	750	---	---	---
F250 SUPER DUTY	4x4	2001	Reg Cab	No	8.0 Box	6.8L V10	5200	6084	8800		B31219	-	---	---	---	650	650	650	---	750	900	---	---
F250 SUPER DUTY	4x4	2001	Reg Cab	No	8.0 Box	6.8L V10	4800	6084	8800		B31219	-	---	---	---	750	850	900	---	---	---	---	---
F250 SUPER DUTY	4x4	2001	Reg Cab	No	8.0 Box	7.3L D	5200	6084	8800		B31219	-	---	---	---	900	1000	---	---	---	---	---	---
F250 SUPER DUTY	4x4	2001	Super Cab	No	7.0 Box	5.4L V8	5200	6084	8800		B31219	-	---	---	---	600	600	600	---	700	850	950	---
F250 SUPER DUTY	4x4	2001	Super Cab	No	7.0 Box	5.4L V8	4800	6084	8800		B31219	-	---	---	---	600	600	600	---	900	---	---	---
F250 SUPER DUTY	4x4	2001	Super Cab	No	7.0 Box	6.8L V10	5200	6084	8800		B31219	-	---	---	---	650	700	700	---	750	900	---	---
F250 SUPER DUTY	4x4	2001	Super Cab	No	7.0 Box	6.8L V10	4800	6084	8800		B31219	-	---	---	---	900	1000	---	---	---	---	---	---
F250 SUPER DUTY	4x4	2001	Super Cab	No	8.0 Box	5.4L V8	5200	6084	8800		B31219	-	---	---	---	550	550	600	---	650	800	---	---
F250 SUPER DUTY	4x4	2001	Super Cab	No	8.0 Box	5.4L V8	4800	6084	8800		B31219	-	---	---	---	750	900	950	---	---	---	---	---
F250 SUPER DUTY	4x4	2001	Super Cab	No	8.0 Box	6.8L V10	5200	6084	8800		B31219	-	---	---	---	600	650	650	---	700	---	---	---
F250 SUPER DUTY	4x4	2001	Crew Cab	No	7.0 Box	5.4L V8	5200	6084	8800		B31219	-	---	---	---	500	550	550	---	600	800	---	---
F250 SUPER DUTY	4x4	2001	Crew Cab	No	7.0 Box	5.4L V8	4800	6084	8800		B31219	-	---	---	---	950	---	---	---	---	---	---	---
F250 SUPER DUTY	4x4	2001	Crew Cab	No	7.0 Box	6.8L V10	5200	6084	8800		B31219	-	---	---	---	550	600	600	---	650	---	---	---
F250 SUPER DUTY	4x4	2001	Crew Cab	No	8.0 Box	5.4L V8	5200	6084	8800		B31219	-	---	---	---	500	550	550	---	600	---	---	---
F250 SUPER DUTY	4x4	2001	Crew Cab	No	8.0 Box	6.8L V10	5200	6084	8800		B31219	-	---	---	---	550	600	600	---	850	---	---	---
F250 SUPER DUTY	4x4	2001	All	No	Chassis	All	All	All	8501		B31219	-	---	---	---	?	?	?	---	?	?	?	---

Notes:

1. Ballast amounts are based on a "Representative Vehicle," defined in the vehicle selection guide instructions, and must be modified for all other configurations for axle and GVWR compliance.
45. Ballast amounts for Model 760LT and 810PP are calculated on reduced plow weights produced after March 2006 (Serial Number 0603 or later). See the weight and dimensional charts at the end of this guide for reduced, current and old plow weights.

2005 to 1997 Ford

													LT			HD			SPEEDWING™		POWER PLOW™		
													680LT	720LT	760LT[45]	760 HD	800 HD	860 HD	760SW	860SW	810PP[45]	8611LP	8611PP
												Blade Width	6'-8"	7'-2"	7'-6"	7'-6"	8'-0"	8'-6"	7'-6"	8'-6"	8'-0" 10'-0"	8'-6" 11'-0"	8'-6" 11'-0"
												Blade Assembly	B0680	B0720	B0761	B0760	B0800	B0860	B0765	B0865	B0810	B0863	B0861
												Joystick Control	B62073								B62109		
												Touchpad Control	B62142								B62141		
Model		Year	Body Style	DRW	Box Option	Engine Type	Min FGAWR	Min RGAWR	Min GVWR	Headlight Conversion Harness	POWER HITCH™ System Under-carriage	POWER HITCH™ System Notes	Ballast Guidelines, lbs (1)										
F350 SUPER DUTY	4x4	2001	Reg Cab	No	8.0 Box	5.4L V8	5200	6830	9900	2B use B62220 or HB5 use B62222	B31219	-	---	---	---	600	600	600	---	700	850	950	---
F350 SUPER DUTY	4x4	2001	Reg Cab	No	8.0 Box	5.4L V8	4800	6830	9900		B31219	-	---	---	---	600	600	600	---	700	---	---	---
F350 SUPER DUTY	4x4	2001	Reg Cab	No	8.0 Box	6.8L V10	5200	6830	9900		B31219	-	---	---	---	650	650	650	---	750	900	---	---
F350 SUPER DUTY	4x4	2001	Reg Cab	No	8.0 Box	6.8L V10	4800	6830	9900		B31219	-	---	---	---	700	800	850	---	---	---	---	---
F350 SUPER DUTY	4x4	2001	Reg Cab	No	8.0 Box	7.3L D	5200	6830	9900		B31219	-	---	---	---	800	900	950	---	---	---	---	---
F350 SUPER DUTY	4x4	2001	Reg Cab	Yes	8.0 Box	5.4L V8	5200	8250	11200		B31219	-	---	---	---	---	---	400	---	500	650	900	---
F350 SUPER DUTY	4x4	2001	Reg Cab	Yes	8.0 Box	6.8L V10	5200	8250	11200		B31219	-	---	---	---	---	---	450	---	500	750	---	---
F350 SUPER DUTY	4x4	2001	Super Cab	No	7.0 Box	5.4L V8	5200	6830	9900		B31219	-	---	---	---	600	600	600	---	700	850	950	---
F350 SUPER DUTY	4x4	2001	Super Cab	No	7.0 Box	6.8L V10	5200	6830	9900		B31219	-	---	---	---	650	700	700	---	750	900	---	---
F350 SUPER DUTY	4x4	2001	Super Cab	No	8.0 Box	5.4L V8	5200	6830	9900		B31219	-	---	---	---	550	550	600	---	650	800	---	---
F350 SUPER DUTY	4x4	2001	Super Cab	No	8.0 Box	5.4L V8	4800	6830	9900		B31219	-	---	---	---	750	850	900	---	---	---	---	---
F350 SUPER DUTY	4x4	2001	Super Cab	No	8.0 Box	6.8L V10	5200	6830	9900		B31219	-	---	---	---	600	650	650	---	700	---	---	---
F350 SUPER DUTY	4x4	2001	Super Cab	Yes	8.0 Box	5.4L V8	5200	8250	11200		B31219	-	---	---	---	---	---	450	---	500	750	---	---
F350 SUPER DUTY	4x4	2001	Super Cab	Yes	8.0 Box	6.8L V10	5200	8250	11200		B31219	-	---	---	---	---	---	450	---	500	---	---	---
F350 SUPER DUTY	4x4	2001	Crew Cab	No	7.0 Box	6.8L V10	5200	6830	9900		B31219	-	---	---	---	550	600	600	---	650	---	---	---
F350 SUPER DUTY	4x4	2001	Crew Cab	No	8.0 Box	5.4L V8	5200	6830	9900		B31219	-	---	---	---	500	550	550	---	600	---	---	---
F350 SUPER DUTY	4x4	2001	Crew Cab	No	8.0 Box	6.8L V10	5200	6830	9900		B31219	-	---	---	---	550	600	600	---	850	---	---	---
F350 SUPER DUTY	4x4	2001	Crew Cab	Yes	7.0 Box	6.8L V10	5200	8250	11200		B31219	-	---	---	---	---	---	450	---	550	---	---	---
F350 SUPER DUTY	4x4	2001	Crew Cab	Yes	8.0 Box	6.8L V10	5200	8250	11200		B31219	-	---	---	---	---	---	800	---	---	---	---	---
F350 SUPER DUTY	4x4	2001	All	No	Chassis	All	All	All	8501		B31219	-	---	---	---	?	?	?	---	?	?	?	---
F350 SUPER DUTY	4x4	2001	All	Yes	Chassis	All	All	All	8501		B31219	-	---	---	---	---	---	?	---	?	?	?	---
F450 SUPER DUTY	4x4	2001	All	Yes	Chassis	All	All	All	8501		B31250	-	---	---	---	---	---	?	---	?	?	?	?
F450 SUPER DUTY	4x2	2001	All	Yes	Chassis	All	All	All	10001		B31250	-	---	---	---	---	---	?	---	?	?	?	?
F550 SUPER DUTY	4x4	2001	All	Yes	Chassis	All	All	All	8501		B31250	-	---	---	---	---	---	?	---	?	?	?	?
F550 SUPER DUTY	4x2	2001	All	Yes	Chassis	All	All	All	10001		B31250	-	---	---	---	---	---	?	---	?	?	?	?
RANGER	4x4	2000	Reg Cab	No	6.0 Box	3.0L V6	2710	2750	4980	HB5 use B62222	B31142	-	750	---	---	---	---	---	---	---	---	---	---
RANGER	4x4	2000	Reg Cab	No	6.0 Box	3.0L V6	2710	2600	4980		B31142	-	750	---	---	---	---	---	---	---	---	---	---
RANGER	4x4	2000	Reg Cab	No	7.0 Box	3.0L V6	2710	2750	5020		B31142	-	650	---	---	---	---	---	---	---	---	---	---
RANGER	4x4	2000	Reg Cab	No	7.0 Box	3.0L V6	2710	2600	5020		B31142	-	650	---	---	---	---	---	---	---	---	---	---
RANGER	4x4	2000	Super Cab	No	6.0 Box	3.0L V6	2850	2750	5140		B31142	-	650	---	---	---	---	---	---	---	---	---	---
RANGER	4x4	2000	Super Cab	No	6.0 Box	3.0L V6	2850	2750	5080		B31142	-	650	---	---	---	---	---	---	---	---	---	---

Notes:

1. Ballast amounts are based on a "Representative Vehicle," defined in the vehicle selection guide instructions, and must be modified for all other configurations for axle and GVWR compliance.
45. Ballast amounts for Model 760LT and 810PP are calculated on reduced plow weights produced after March 2006 (Serial Number 0603 or later). See the weight and dimensional charts at the end of this guide for reduced, current and old plow weights.

2005 to 1997 Ford

													LT			HD			SPEEDWING™		POWER PLOW™		
													680LT	720LT	760LT[45]	760 HD	800 HD	860 HD	760SW	860SW	810PP[45]	8611LP	8611PP
												Blade Width	6'-8"	7'-2"	7'-6"	7'-6"	8'-0"	8'-6"	7'-6"	8'-6"	8'-0" 10'-0"	8'-6" 11'-0"	8'-6" 11'-0"
												Blade Assembly	B0680	B0720	B0761	B0760	B0800	B0860	B0765	B0865	B0810	B0863	B0861
												Joystick Control	B62073								B62109		
												Touchpad Control	B62142								B62141		
Model		Year	Body Style	DRW	Box Option	Engine Type	Min FGAWR	Min RGAWR	Min GVWR	Headlight Conversion Harness	POWER HITCH™ System Under-carriage	POWER HITCH™ System Notes	Ballast Guidelines, lbs (1)										
F150	4x4	2000	Reg Cab	No	6.5 Box	4.2L V6	3680	3550	6000	HB5 use B62222	B31046	-	---	---	350	---	---	---	450	---	---	---	---
F150	4x4	2000	Reg Cab	No	6.5 Box	4.2L V6	3660	3550	6000		B31046	-	---	---	350	---	---	---	500	---	---	---	---
F150	4x4	2000	Reg Cab	No	6.5 Box	4.6L V8	3680	3550	6250		B31046	-	---	---	400	---	---	---	---	---	---	---	---
F150	4x4	2000	Reg Cab	No	6.5 Box	4.6L V8	3680	3550	6000		B31046	-	---	---	350	---	---	---	---	---	---	---	---
F150	4x4	2000	Reg Cab	No	6.5 Box	4.6L V8	3660	3550	6250		B31046	-	---	---	400	---	---	---	---	---	---	---	---
F150	4x4	2000	Reg Cab	No	6.5 Box	4.6L V8	3660	3550	6000		B31046	-	---	---	350	---	---	---	---	---	---	---	---
F150	4x4	2000	Reg Cab	No	6.5 Box	5.4L V8	3680	3550	6300		B31046	-	---	---	450	---	---	---	---	---	---	---	---
F150	4x4	2000	Reg Cab	No	6.5 Box	5.4L V8	3660	3550	6300		B31046	-	---	---	500	---	---	---	---	---	---	---	---
F150	4x4	2000	Reg Cab	No	8.0 Box	4.2L V6	3680	3550	6000		B31046	-	---	---	400	---	---	---	---	---	---	---	---
F150	4x4	2000	Reg Cab	No	8.0 Box	4.2L V6	3660	3550	6000		B31046	-	---	---	400	---	---	---	---	---	---	---	---
F150	4x4	2000	Reg Cab	No	8.0 Box	4.6L V8	3680	3550	6250		B31046	-	---	---	600	---	---	---	---	---	---	---	---
F150	4x4	2000	Reg Cab	No	8.0 Box	4.6L V8	3660	3550	6250		B31046	-	---	---	700	---	---	---	---	---	---	---	---
F150	4x4	2000	Reg Cab	No	8.0 Box	5.4L V8	4150	4800	7700		B31046	-	---	---	300	---	---	---	400	---	---	---	---
F150	4x4	2000	Super Cab	No	6.5 Box	5.4L V8	4150	4800	7700		B31046	-	---	---	300	---	---	---	350	---	---	---	---
F250 SUPER DUTY	4x4	2000	Reg Cab	No	8.0 Box	5.4L V8	5200	6084	8800	2B use B62220 or HB5 use B62222	B31219	-	---	---	---	600	600	600	---	700	850	950	---
F250 SUPER DUTY	4x4	2000	Reg Cab	No	8.0 Box	5.4L V8	4800	6084	8800		B31219	-	---	---	---	600	600	600	---	700	---	---	---
F250 SUPER DUTY	4x4	2000	Reg Cab	No	8.0 Box	6.8L V10	5200	6084	8800		B31219	-	---	---	---	650	650	650	---	750	900	---	---
F250 SUPER DUTY	4x4	2000	Reg Cab	No	8.0 Box	6.8L V10	4800	6084	8800		B31219	-	---	---	---	700	800	900	---	---	---	---	---
F250 SUPER DUTY	4x4	2000	Reg Cab	No	8.0 Box	7.3L D	5200	6084	8800		B31219	-	---	---	---	900	1000	---	---	---	---	---	---
F250 SUPER DUTY	4x4	2000	Super Cab	No	7.0 Box	5.4L V8	5200	6084	8800		B31219	-	---	---	---	600	600	600	---	700	850	950	---
F250 SUPER DUTY	4x4	2000	Super Cab	No	7.0 Box	5.4L V8	4800	6084	8800		B31219	-	---	---	---	600	600	600	---	900	---	---	---
F250 SUPER DUTY	4x4	2000	Super Cab	No	7.0 Box	6.8L V10	5200	6084	8800		B31219	-	---	---	---	650	700	700	---	750	900	---	---
F250 SUPER DUTY	4x4	2000	Super Cab	No	7.0 Box	6.8L V10	4800	6084	8800		B31219	-	---	---	---	900	1000	---	---	---	---	---	---
F250 SUPER DUTY	4x4	2000	Super Cab	No	8.0 Box	5.4L V8	5200	6084	8800		B31219	-	---	---	---	550	550	600	---	650	800	---	---
F250 SUPER DUTY	4x4	2000	Super Cab	No	8.0 Box	5.4L V8	4800	6084	8800		B31219	-	---	---	---	750	900	950	---	---	---	---	---
F250 SUPER DUTY	4x4	2000	Super Cab	No	8.0 Box	6.8L V10	5200	6084	8800		B31219	-	---	---	---	600	650	650	---	700	---	---	---
F250 SUPER DUTY	4x4	2000	Crew Cab	No	7.0 Box	5.4L V8	5200	6084	8800		B31219	-	---	---	---	500	550	550	---	600	800	---	---
F250 SUPER DUTY	4x4	2000	Crew Cab	No	7.0 Box	5.4L V8	4800	6084	8800		B31219	-	---	---	---	950	---	---	---	---	---	---	---
F250 SUPER DUTY	4x4	2000	Crew Cab	No	7.0 Box	6.8L V10	5200	6084	8800		B31219	-	---	---	---	550	600	600	---	650	---	---	---
F250 SUPER DUTY	4x4	2000	Crew Cab	No	8.0 Box	5.4L V8	5200	6084	8800		B31219	-	---	---	---	500	550	550	---	600	---	---	---
F250 SUPER DUTY	4x4	2000	Crew Cab	No	8.0 Box	6.8L V10	5200	6084	8800		B31219	-	---	---	---	550	600	600	---	850	---	---	---
F250 SUPER DUTY	4x4	2000	All	No	Chassis	All	All	All	10000		B31219	-	---	---	---	?	?	?	---	?	?	?	---

Notes:

1. Ballast amounts are based on a "Representative Vehicle," defined in the vehicle selection guide instructions, and must be modified for all other configurations for axle and GVWR compliance.
45. Ballast amounts for Model 760LT and 810PP are calculated on reduced plow weights produced after March 2006 (Serial Number 0603 or later). See the weight and dimensional charts at the end of this guide for reduced, current and old plow weights.

2005 to 1997 Ford

													POWER HITCH™										
													LT			HD			SPEEDWING™		POWER PLOW™		
													680LT	720LT	760LT[45]	760 HD	800 HD	860 HD	760SW	860SW	810PP[45]	8611LP	8611PP
												Blade Width	6'-8"	7'-2"	7'-6"	7'-6"	8'-0"	8'-6"	7'-6"	8'-6"	8'-0" 10'-0"	8'-6" 11'-0"	8'-6" 11'-0"
												Blade Assembly	B0680	B0720	B0761	B0760	B0800	B0860	B0765	B0865	B0810	B0863	B0861
												Joystick Control	B62073								B62109		
												Touchpad Control	B62142								B62141		
Model		Year	Body Style	DRW	Box Option	Engine Type	Min FGAWR	Min RGAWR	Min GVWR	Headlight Conversion Harness	POWER HITCH™ System Under-carriage	POWER HITCH™ System Notes	Ballast Guidelines, lbs (1)										
F350 SUPER DUTY	4x4	2000	Reg Cab	No	8.0 Box	5.4L V8	5200	6830	9900	2B use B62220 or HB5 use B62222	B31219	-	---	---	---	600	600	600	---	700	850	950	---
F350 SUPER DUTY	4x4	2000	Reg Cab	No	8.0 Box	5.4L V8	4800	6830	9900		B31219	-	---	---	---	600	600	600	---	700	---	---	---
F350 SUPER DUTY	4x4	2000	Reg Cab	No	8.0 Box	6.8L V10	5200	6830	9900		B31219	-	---	---	---	650	650	650	---	750	900	---	---
F350 SUPER DUTY	4x4	2000	Reg Cab	No	8.0 Box	6.8L V10	4800	6830	9900		B31219	-	---	---	---	700	800	850	---	---	---	---	---
F350 SUPER DUTY	4x4	2000	Reg Cab	No	8.0 Box	7.3L D	5200	6830	9900		B31219	-	---	---	---	800	900	950	---	---	---	---	---
F350 SUPER DUTY	4x4	2000	Reg Cab	Yes	8.0 Box	5.4L V8	5200	8250	11200		B31219	-	---	---	---	---	---	400	---	500	650	900	---
F350 SUPER DUTY	4x4	2000	Reg Cab	Yes	8.0 Box	6.8L V10	5200	8250	11200		B31219	-	---	---	---	---	---	450	---	500	750	---	---
F350 SUPER DUTY	4x4	2000	Super Cab	No	7.0 Box	5.4L V8	5200	6830	9900		B31219	-	---	---	---	600	600	600	---	700	850	950	---
F350 SUPER DUTY	4x4	2000	Super Cab	No	7.0 Box	6.8L V10	5200	6830	9900		B31219	-	---	---	---	650	700	700	---	750	900	---	---
F350 SUPER DUTY	4x4	2000	Super Cab	No	8.0 Box	5.4L V8	5200	6830	9900		B31219	-	---	---	---	550	550	600	---	650	800	---	---
F350 SUPER DUTY	4x4	2000	Super Cab	No	8.0 Box	5.4L V8	4800	6830	9900		B31219	-	---	---	---	750	850	900	---	---	---	---	---
F350 SUPER DUTY	4x4	2000	Super Cab	No	8.0 Box	6.8L V10	5200	6830	9900		B31219	-	---	---	---	600	650	650	---	700	---	---	---
F350 SUPER DUTY	4x4	2000	Super Cab	Yes	8.0 Box	5.4L V8	5200	8250	11200		B31219	-	---	---	---	---	---	450	---	500	750	---	---
F350 SUPER DUTY	4x4	2000	Super Cab	Yes	8.0 Box	6.8L V10	5200	8250	11200		B31219	-	---	---	---	---	---	450	---	500	---	---	---
F350 SUPER DUTY	4x4	2000	Crew Cab	No	7.0 Box	6.8L V10	5200	6830	9900		B31219	-	---	---	---	550	600	600	---	650	---	---	---
F350 SUPER DUTY	4x4	2000	Crew Cab	No	8.0 Box	5.4L V8	5200	6830	9900		B31219	-	---	---	---	500	550	550	---	600	---	---	---
F350 SUPER DUTY	4x4	2000	Crew Cab	No	8.0 Box	6.8L V10	5200	6830	9900		B31219	-	---	---	---	550	600	600	---	850	---	---	---
F350 SUPER DUTY	4x4	2000	Crew Cab	Yes	7.0 Box	6.8L V10	5200	8250	11200		B31219	-	---	---	---	---	---	450	---	550	---	---	---
F350 SUPER DUTY	4x4	2000	Crew Cab	Yes	8.0 Box	6.8L V10	5200	8250	11200		B31219	-	---	---	---	---	---	800	---	---	---	---	---
F350 SUPER DUTY	4x4	2000	All	No	Chassis	All	All	All	10000		B31219	-	---	---	---	?	?	?	---	?	?	?	---
F350 SUPER DUTY	4x4	2000	All	Yes	Chassis	All	All	All	10000		B31219	-	---	---	---	---	---	?	---	?	?	?	---
F450 SUPER DUTY	4x4	2000	All	Yes	Chassis	All	All	All	8501		B31250	-	---	---	---	---	---	?	---	?	?	?	?
F450 SUPER DUTY	4x2	2000	All	Yes	Chassis	All	All	All	10001		B31250	-	---	---	---	---	---	?	---	?	?	?	?
F550 SUPER DUTY	4x4	2000	All	Yes	Chassis	All	All	All	8501		B31250	-	---	---	---	---	---	?	---	?	?	?	?
F550 SUPER DUTY	4x2	2000	All	Yes	Chassis	All	All	All	10001		B31250	-	---	---	---	---	---	?	---	?	?	?	?

Notes:

1. Ballast amounts are based on a "Representative Vehicle," defined in the vehicle selection guide instructions, and must be modified for all other configurations for axle and GVWR compliance.

45. Ballast amounts for Model 760LT and 810PP are calculated on reduced plow weights produced after March 2006 (Serial Number 0603 or later). See the weight and dimensional charts at the end of this guide for reduced, current and old plow weights.

2005 to 1997 Ford

													LT			HD			SPEEDWING™		POWER PLOW™		
													680LT	720LT	760LT[45]	760 HD	800 HD	860 HD	760SW	860SW	810PP[45]	8611LP	8611PP
												Blade Width	6'-8"	7'-2"	7'-6"	7'-6"	8'-0"	8'-6"	7'-6"	8'-6"	8'-0" 10'-0"	8'-6" 11'-0"	8'-6" 11'-0"
												Blade Assembly	B0680	B0720	B0761	B0760	B0800	B0860	B0765	B0865	B0810	B0863	B0861
												Joystick Control	B62073								B62109		
												Touchpad Control	B62142								B62141		
Model		Year	Body Style	DRW	Box Option	Engine Type	Min FGAWR	Min RGAWR	Min GVWR	Headlight Conversion Harness	POWER HITCH™ System Under-carriage	POWER HITCH™ System Notes	Ballast Guidelines, lbs (1)										
RANGER	4x4	1999	Reg Cab	No	6.0 Box	3.0L V6	2710	2750	4980		B31142	-	600	700	---	---	---	---	---	---	---	---	---
RANGER	4x4	1999	Reg Cab	No	6.0 Box	3.0L V6	2710	2600	4980		B31142	-	600	700	---	---	---	---	---	---	---	---	---
RANGER	4x4	1999	Reg Cab	No	7.0 Box	3.0L V6	2710	2750	4980		B31142	-	600	650	---	---	---	---	---	---	---	---	---
RANGER	4x4	1999	Reg Cab	No	7.0 Box	3.0L V6	2710	2600	4980		B31142	-	600	650	---	---	---	---	---	---	---	---	---
RANGER	4x4	1999	Super Cab	No	6.0 Box	3.0L V6	2900	2750	5120		B31142	-	250	350	---	---	---	---	---	---	---	---	---
RANGER	4x4	1999	Super Cab	No	6.0 Box	3.0L V6	2900	2750	5080		B31142	-	250	350	---	---	---	---	---	---	---	---	---
RANGER	4x4	1999	Super Cab	No	6.0 Box	3.0L V6	2900	2600	5120		B31142	-	250	350	---	---	---	---	---	---	---	---	---
RANGER	4x4	1999	Super Cab	No	6.0 Box	3.0L V6	2900	2600	5080		B31142	-	250	350	---	---	---	---	---	---	---	---	---
F150	4x4	1999	Reg Cab	No	6.0 Box	4.2L V6	3900	3550	6300		B31046	-	---	---	250	---	---	---	350	---	---	---	---
F150	4x4	1999	Reg Cab	No	6.0 Box	4.2L V6	3900	3550	6250		B31046	-	---	---	300	---	---	---	400	---	---	---	---
F150	4x4	1999	Reg Cab	No	6.0 Box	4.2L V6	3900	3550	6000		B31046	-	---	---	250	---	---	---	350	---	---	---	---
F150	4x4	1999	Reg Cab	No	6.0 Box	4.2L V6	3760	3550	6300		B31046	-	---	---	250	---	---	---	---	---	---	---	---
F150	4x4	1999	Reg Cab	No	6.0 Box	4.2L V6	3760	3550	6250		B31046	-	---	---	300	---	---	---	400	---	---	---	---
F150	4x4	1999	Reg Cab	No	6.0 Box	4.2L V6	3760	3550	6000		B31046	-	---	---	250	---	---	---	350	---	---	---	---
F150	4x4	1999	Reg Cab	No	6.0 Box	4.2L V6	3700	3550	6300		B31046	-	---	---	250	---	---	---	---	---	---	---	---
F150	4x4	1999	Reg Cab	No	6.0 Box	4.2L V6	3700	3550	6250	HB5 use B62222	B31046	-	---	---	300	---	---	---	500	---	---	---	---
F150	4x4	1999	Reg Cab	No	6.0 Box	4.2L V6	3700	3550	6000		B31046	-	---	---	250	---	---	---	350	---	---	---	---
F150	4x4	1999	Reg Cab	No	6.0 Box	4.2L V6	3680	3550	6300		B31046	-	---	---	300	---	---	---	---	---	---	---	---
F150	4x4	1999	Reg Cab	No	6.0 Box	4.2L V6	3680	3550	6250		B31046	-	---	---	300	---	---	---	600	---	---	---	---
F150	4x4	1999	Reg Cab	No	6.0 Box	4.2L V6	3680	3550	6000		B31046	-	---	---	250	---	---	---	350	---	---	---	---
F150	4x4	1999	Reg Cab	No	6.0 Box	4.2L V6	3660	3550	6300		B31046	-	---	---	350	---	---	---	---	---	---	---	---
F150	4x4	1999	Reg Cab	No	6.0 Box	4.2L V6	3660	3550	6250		B31046	-	---	---	300	---	---	---	650	---	---	---	---
F150	4x4	1999	Reg Cab	No	6.0 Box	4.2L V6	3660	3550	6000		B31046	-	---	---	250	---	---	---	400	---	---	---	---
F150	4x4	1999	Reg Cab	No	6.0 Box	4.6L V8	3900	3550	6300		B31046	-	---	---	300	---	---	---	400	---	---	---	---
F150	4x4	1999	Reg Cab	No	6.0 Box	4.6L V8	3900	3550	6250		B31046	-	---	---	300	---	---	---	400	---	---	---	---
F150	4x4	1999	Reg Cab	No	6.0 Box	4.6L V8	3900	3550	6000		B31046	-	---	---	300	---	---	---	400	---	---	---	---
F150	4x4	1999	Reg Cab	No	6.0 Box	4.6L V8	3760	3550	6300		B31046	-	---	---	300	---	---	---	---	---	---	---	---
F150	4x4	1999	Reg Cab	No	6.0 Box	4.6L V8	3760	3550	6250		B31046	-	---	---	300	---	---	---	550	---	---	---	---
F150	4x4	1999	Reg Cab	No	6.0 Box	4.6L V8	3760	3550	6000		B31046	-	---	---	300	---	---	---	400	---	---	---	---
F150	4x4	1999	Reg Cab	No	6.0 Box	4.6L V8	3700	3550	6300		B31046	-	---	---	500	---	---	---	---	---	---	---	---
F150	4x4	1999	Reg Cab	No	6.0 Box	4.6L V8	3700	3550	6250		B31046	-	---	---	300	---	---	---	---	---	---	---	---
F150	4x4	1999	Reg Cab	No	6.0 Box	4.6L V8	3700	3550	6000		B31046	-	---	---	300	---	---	---	---	---	---	---	---

Notes:

1. Ballast amounts are based on a "Representative Vehicle," defined in the vehicle selection guide instructions, and must be modified for all other configurations for axle and GVWR compliance.
45. Ballast amounts for Model 760LT and 810PP are calculated on reduced plow weights produced after March 2006 (Serial Number 0603 or later). See the weight and dimensional charts at the end of this guide for reduced, current and old plow weights.

2005 to 1997 Ford

													LT			HD			SPEEDWING™		POWER PLOW™		
													680LT	720LT	760LT[45]	760 HD	800 HD	860 HD	760SW	860SW	810PP[45]	8611LP	8611PP
												Blade Width	6'-8"	7'-2"	7'-6"	7'-6"	8'-0"	8'-6"	7'-6"	8'-6"	8'-0" 10'-0"	8'-6" 11'-0"	8'-6" 11'-0"
												Blade Assembly	B0680	B0720	B0761	B0760	B0800	B0860	B0765	B0865	B0810	B0863	B0861
												Joystick Control	B62073								B62109		
												Touchpad Control	B62142								B62141		
Model		Year	Body Style	DRW	Box Option	Engine Type	Min FGAWR	Min RGAWR	Min GVWR	Headlight Conversion Harness	POWER HITCH™ System Under-carriage	POWER HITCH™ System Notes	Ballast Guidelines, lbs (1)										
F150	4x4	1999	Reg Cab	No	6.0 Box	4.6L V8	3680	3550	6300	HB5 use B62222	B31046	-	---	---	550	---	---	---	---	---	---	---	---
F150	4x4	1999	Reg Cab	No	6.0 Box	4.6L V8	3680	3550	6250		B31046	-	---	---	300	---	---	---	---	---	---	---	---
F150	4x4	1999	Reg Cab	No	6.0 Box	4.6L V8	3680	3550	6000		B31046	-	---	---	300	---	---	---	---	---	---	---	---
F150	4x4	1999	Reg Cab	No	6.0 Box	4.6L V8	3660	3550	6250		B31046	-	---	---	350	---	---	---	---	---	---	---	---
F150	4x4	1999	Reg Cab	No	6.0 Box	4.6L V8	3660	3550	6000		B31046	-	---	---	300	---	---	---	---	---	---	---	---
F150	4x4	1999	Reg Cab	No	6.0 Box	5.4L V8	3900	3550	6300		B31046	-	---	---	300	---	---	---	---	---	---	---	---
F150	4x4	1999	Reg Cab	No	6.0 Box	5.4L V8	3900	3550	6250		B31046	-	---	---	300	---	---	---	---	---	---	---	---
F150	4x4	1999	Reg Cab	No	6.0 Box	5.4L V8	3900	3550	6000		B31046	-	---	---	300	---	---	---	---	---	---	---	---
F150	4x4	1999	Reg Cab	No	6.0 Box	5.4L V8	3760	3550	6250		B31046	-	---	---	400	---	---	---	---	---	---	---	---
F150	4x4	1999	Reg Cab	No	6.0 Box	5.4L V8	3760	3550	6000		B31046	-	---	---	300	---	---	---	---	---	---	---	---
F150	4x4	1999	Reg Cab	No	6.0 Box	5.4L V8	3700	3550	6000		B31046	-	---	---	350	---	---	---	---	---	---	---	---
F150	4x4	1999	Reg Cab	No	8.0 Box	4.6L V8	3900	3550	6300		B31046	-	---	---	400	---	---	---	---	---	---	---	---
F150	4x4	1999	Reg Cab	No	8.0 Box	4.6L V8	3900	3550	6250		B31046	-	---	---	400	---	---	---	500	---	---	---	---
F150	4x4	1999	Reg Cab	No	8.0 Box	4.6L V8	3900	3550	6000		B31046	-	---	---	350	---	---	---	---	---	---	---	---
F150	4x4	1999	Reg Cab	No	8.0 Box	4.6L V8	3760	3550	6250		B31046	-	---	---	400	---	---	---	---	---	---	---	---
F150	4x4	1999	Reg Cab	No	8.0 Box	4.6L V8	3760	3550	6000		B31046	-	---	---	350	---	---	---	---	---	---	---	---
F150	4x4	1999	Reg Cab	No	8.0 Box	4.6L V8	3700	3550	6250		B31046	-	---	---	650	---	---	---	---	---	---	---	---
F150	4x4	1999	Reg Cab	No	8.0 Box	4.6L V8	3700	3550	6000		B31046	-	---	---	350	---	---	---	---	---	---	---	---
F150	4x4	1999	Reg Cab	No	8.0 Box	4.6L V8	3680	3550	6000		B31046	-	---	---	400	---	---	---	---	---	---	---	---
F150	4x4	1999	Reg Cab	No	8.0 Box	5.4L V8	3900	3550	6250		B31046	-	---	---	400	---	---	---	---	---	---	---	---
F150	4x4	1999	Ext Cab	No	6.0 Box	4.6L V8	3900	3550	6500		B31046	-	---	---	300	---	---	---	---	---	---	---	---
F150	4x4	1999	Ext Cab	No	6.0 Box	4.6L V8	3900	3550	6250		B31046	-	---	---	300	---	---	---	400	---	---	---	---
F150	4x4	1999	Ext Cab	No	6.0 Box	4.6L V8	3760	3550	6500		B31046	-	---	---	650	---	---	---	---	---	---	---	---
F150	4x4	1999	Ext Cab	No	6.0 Box	4.6L V8	3760	3550	6250		B31046	-	---	---	300	---	---	---	---	---	---	---	---
F150	4x4	1999	Ext Cab	No	6.0 Box	4.6L V8	3700	3550	6250		B31046	-	---	---	500	---	---	---	---	---	---	---	---
F150	4x4	1999	Ext Cab	No	8.0 Box	4.6L V8	3900	3550	6250		B31046	-	---	---	300	---	---	---	---	---	---	---	---
F250LD	4x4	1999	Reg Cab	No	8.0 Box	4.6L V8	4150	4800	7700		B31046	-	---	---	250	---	---	---	350	---	---	---	---
F250LD	4x4	1999	Reg Cab	No	8.0 Box	4.6L V8	4150	4800	7200		B31046	-	---	---	200	---	---	---	350	---	---	---	---
F250LD	4x4	1999	Reg Cab	No	8.0 Box	4.6L V8	4150	4300	7200		B31046	-	---	---	200	---	---	---	350	---	---	---	---
F250LD	4x4	1999	Reg Cab	No	8.0 Box	4.6L V8	3660	4800	7200		B31046	-	---	---	700	---	---	---	---	---	---	---	---
F250LD	4x4	1999	Reg Cab	No	8.0 Box	4.6L V8	3660	4300	7200		B31046	-	---	---	700	---	---	---	---	---	---	---	---

Notes:

1. Ballast amounts are based on a "Representative Vehicle," defined in the vehicle selection guide instructions, and must be modified for all other configurations for axle and GVWR compliance.

45. Ballast amounts for Model 760LT and 810PP are calculated on reduced plow weights produced after March 2006 (Serial Number 0603 or later). See the weight and dimensional charts at the end of this guide for reduced, current and old plow weights.

2005 to 1997 Ford

													LT			HD			SPEEDWING™		POWER PLOW™		
													680LT	720LT	760LT[45]	760 HD	800 HD	860 HD	760SW	860SW	810PP[45]	8611LP	8611PP
												Blade Width	6'-8"	7'-2"	7'-6"	7'-6"	8'-0"	8'-6"	7'-6"	8'-6"	8'-0" 10'-0"	8'-6" 11'-0"	8'-6" 11'-0"
												Blade Assembly	B0680	B0720	B0761	B0760	B0800	B0860	B0765	B0865	B0810	B0863	B0861
												Joystick Control	B62073								B62109		
												Touchpad Control	B62142								B62141		
Model		Year	Body Style	DRW	Box Option	Engine Type	Min FGAWR	Min RGAWR	Min GVWR	Headlight Conversion Harness	POWER HITCH™ System Under-carriage	POWER HITCH™ System Notes	Ballast Guidelines, lbs (1)										
F250LD	4x4	1999	Reg Cab	No	8.0 Box	5.4L V8	4150	4800	7700	HB5 use B62222	B31046	-	---	---	300	---	---	---	400	---	---	---	---
F250LD	4x4	1999	Reg Cab	No	8.0 Box	5.4L V8	4150	4800	7200		B31046	-	---	---	300	---	---	---	400	---	---	---	---
F250LD	4x4	1999	Reg Cab	No	8.0 Box	5.4L V8	4150	4300	7200		B31046	-	---	---	300	---	---	---	400	---	---	---	---
F250LD	4x4	1999	Ext Cab	No	6.5 Box	4.6L V8	4150	4800	7700		B31046	-	---	---	200	---	---	---	300	---	---	---	---
F250LD	4x4	1999	Ext Cab	No	6.5 Box	4.6L V8	4150	4800	7200		B31046	-	---	---	150	---	---	---	250	---	---	---	---
F250LD	4x4	1999	Ext Cab	No	6.5 Box	4.6L V8	4150	4300	7200		B31046	-	---	---	150	---	---	---	250	---	---	---	---
F250LD	4x4	1999	Ext Cab	No	6.5 Box	4.6L V8	3660	4800	7200		B31046	-	---	---	950	---	---	---	---	---	---	---	---
F250LD	4x4	1999	Ext Cab	No	6.5 Box	4.6L V8	3660	4300	7200		B31046	-	---	---	950	---	---	---	---	---	---	---	---
F250LD	4x4	1999	Ext Cab	No	6.5 Box	5.4L V8	4150	4800	7700		B31046	-	---	---	250	---	---	---	550	---	---	---	---
F250LD	4x4	1999	Ext Cab	No	6.5 Box	5.4L V8	4150	4800	7200		B31046	-	---	---	200	---	---	---	300	---	---	---	---
F250LD	4x4	1999	Ext Cab	No	6.5 Box	5.4L V8	4150	4300	7200		B31046	-	---	---	200	---	---	---	300	---	---	---	---
F250 SUPER DUTY	4x4	1999	Reg Cab	No	8.0 Box	5.4L V8	5200	6084	8800	2B use B62220 or HB5 use B62222	B31219	-	---	---	---	500	550	550	---	600	750	900	---
F250 SUPER DUTY	4x4	1999	Reg Cab	No	8.0 Box	5.4L V8	4800	6084	8800		B31219	-	---	---	---	550	550	550	---	650	---	---	---
F250 SUPER DUTY	4x4	1999	Reg Cab	No	8.0 Box	6.8L V10	5200	6084	8800		B31219	-	---	---	---	550	550	550	---	650	800	900	---
F250 SUPER DUTY	4x4	1999	Reg Cab	No	8.0 Box	6.8L V10	4800	6084	8800		B31219	-	---	---	---	550	600	600	---	800	---	---	---
F250 SUPER DUTY	4x4	1999	Reg Cab	No	8.0 Box	7.3L D	5200	6084	8800		B31219	-	---	---	---	700	750	750	---	950	---	---	---
F250 SUPER DUTY	4x4	1999	Ext Cab	No	7.0 Box	5.4L V8	5200	6084	8800		B31219	-	---	---	---	500	550	550	---	600	750	---	---
F250 SUPER DUTY	4x4	1999	Ext Cab	No	7.0 Box	5.4L V8	4800	6084	8800		B31219	-	---	---	---	550	550	550	---	950	---	---	---
F250 SUPER DUTY	4x4	1999	Ext Cab	No	7.0 Box	6.8L V10	5200	6084	8800		B31219	-	---	---	---	550	600	600	---	650	800	---	---
F250 SUPER DUTY	4x4	1999	Ext Cab	No	7.0 Box	6.8L V10	4800	6084	8800		B31219	-	---	---	---	750	900	950	---	---	---	---	---
F250 SUPER DUTY	4x4	1999	Ext Cab	No	7.0 Box	7.3L D	5200	6084	8800		B31219	-	---	---	---	900	1000	---	---	---	---	---	---
F250 SUPER DUTY	4x4	1999	Ext Cab	No	8.0 Box	5.4L V8	5200	6084	8800		B31219	-	---	---	---	500	500	500	---	600	750	---	---
F250 SUPER DUTY	4x4	1999	Ext Cab	No	8.0 Box	5.4L V8	4800	6084	8800		B31219	-	---	---	---	500	600	650	---	---	---	---	---
F250 SUPER DUTY	4x4	1999	Ext Cab	No	8.0 Box	6.8L V10	5200	6084	8800		B31219	-	---	---	---	550	550	550	---	600	800	---	---
F250 SUPER DUTY	4x4	1999	Ext Cab	No	8.0 Box	6.8L V10	4800	6084	8800		B31219	-	---	---	---	950	---	---	---	---	---	---	---
F250 SUPER DUTY	4x4	1999	Crew Cab	No	7.0 Box	5.4L V8	5200	6084	8800		B31219	-	---	---	---	500	500	500	---	600	950	---	---
F250 SUPER DUTY	4x4	1999	Crew Cab	No	7.0 Box	6.8L V10	5200	6084	8800		B31219	-	---	---	---	550	550	550	---	600	---	---	---
F250 SUPER DUTY	4x4	1999	Crew Cab	No	8.0 Box	5.4L V8	5200	6084	8800		B31219	-	---	---	---	500	500	500	---	600	---	---	---
F250 SUPER DUTY	4x4	1999	Crew Cab	No	8.0 Box	6.8L V10	5200	6084	8800		B31219	-	---	---	---	550	550	550	---	650	---	---	---
F250 SUPER DUTY	4x4	1999	All	No	Chassis	All	All	All	8501		B31219	-	---	---	---	?	?	?	---	?	?	?	---

Notes:

1. Ballast amounts are based on a "Representative Vehicle," defined in the vehicle selection guide instructions, and must be modified for all other configurations for axle and GVWR compliance.
45. Ballast amounts for Model 760LT and 810PP are calculated on reduced plow weights produced after March 2006 (Serial Number 0603 or later). See the weight and dimensional charts at the end of this guide for reduced, current and old plow weights.

2005 to 1997 Ford

													LT			HD			SPEEDWING™		POWER PLOW™		
													680LT	720LT	760LT[45]	760 HD	800 HD	860 HD	760SW	860SW	810PP[45]	8611LP	8611PP
												Blade Width	6'-8"	7'-2"	7'-6"	7'-6"	8'-0"	8'-6"	7'-6"	8'-6"	8'-0" 10'-0"	8'-6" 11'-0"	8'-6" 11'-0"
												Blade Assembly	B0680	B0720	B0761	B0760	B0800	B0860	B0765	B0865	B0810	B0863	B0861
												Joystick Control	B62073								B62109		
												Touchpad Control	B62142								B62141		
Model		Year	Body Style	DRW	Box Option	Engine Type	Min FGAWR	Min RGAWR	Min GVWR	Headlight Conversion Harness	POWER HITCH™ System Under-carriage	POWER HITCH™ System Notes	Ballast Guidelines, lbs (1)										
F350 SUPER DUTY	4x4	1999	Reg Cab	No	8.0 Box	5.4L V8	5200	6830	9900	2B use B62220 or HB5 use B62222	B31219	-	---	---	---	500	550	550	---	600	750	900	---
F350 SUPER DUTY	4x4	1999	Reg Cab	No	8.0 Box	5.4L V8	4800	6830	9900		B31219	-	---	---	---	550	550	550	---	650	---	---	---
F350 SUPER DUTY	4x4	1999	Reg Cab	No	8.0 Box	6.8L V10	5200	6830	9900		B31219	-	---	---	---	550	550	550	---	650	800	900	---
F350 SUPER DUTY	4x4	1999	Reg Cab	No	8.0 Box	6.8L V10	4800	6830	9900		B31219	-	---	---	---	550	600	600	---	850	---	---	---
F350 SUPER DUTY	4x4	1999	Reg Cab	No	8.0 Box	7.3L D	5200	6830	9900		B31219	-	---	---	---	700	750	750	---	950	---	---	---
F350 SUPER DUTY	4x4	1999	Reg Cab	Yes	8.0 Box	5.4L V8	5200	8250	11200		B31219	-	---	---	---	---	---	500	---	550	700	950	---
F350 SUPER DUTY	4x4	1999	Reg Cab	Yes	8.0 Box	5.4L V8	4800	8250	11200		B31219	-	---	---	---	---	---	500	---	900	---	---	---
F350 SUPER DUTY	4x4	1999	Reg Cab	Yes	8.0 Box	6.8L V10	5200	8250	11200		B31219	-	---	---	---	---	---	450	---	550	700	---	---
F350 SUPER DUTY	4x4	1999	Reg Cab	Yes	8.0 Box	6.8L V10	4800	8250	11200		B31219	-	---	---	---	---	---	850	---	---	---	---	---
F350 SUPER DUTY	4x4	1999	Reg Cab	Yes	8.0 Box	7.3L D	5200	8250	11200		B31219	-	---	---	---	---	---	1000	---	---	---	---	---
F350 SUPER DUTY	4x4	1999	Ext Cab	No	7.0 Box	5.4L V8	5200	6830	9900		B31219	-	---	---	---	500	550	550	---	600	750	---	---
F350 SUPER DUTY	4x4	1999	Ext Cab	No	7.0 Box	5.4L V8	4800	6830	9900		B31219	-	---	---	---	550	550	550	---	1000	---	---	---
F350 SUPER DUTY	4x4	1999	Ext Cab	No	7.0 Box	6.8L V10	5200	6830	9900		B31219	-	---	---	---	550	600	600	---	650	800	---	---
F350 SUPER DUTY	4x4	1999	Ext Cab	No	7.0 Box	6.8L V10	4800	6830	9900		B31219	-	---	---	---	800	900	950	---	---	---	---	---
F350 SUPER DUTY	4x4	1999	Ext Cab	No	7.0 Box	7.3L D	5200	6830	9900		B31219	-	---	---	---	900	---	---	---	---	---	---	---
F350 SUPER DUTY	4x4	1999	Ext Cab	No	8.0 Box	5.4L V8	5200	6830	9900		B31219	-	---	---	---	500	500	500	---	600	750	---	---
F350 SUPER DUTY	4x4	1999	Ext Cab	No	8.0 Box	5.4L V8	4800	6830	9900		B31219	-	---	---	---	500	650	700	---	---	---	---	---
F350 SUPER DUTY	4x4	1999	Ext Cab	No	8.0 Box	6.8L V10	5200	6830	9900		B31219	-	---	---	---	550	550	550	---	600	800	---	---
F350 SUPER DUTY	4x4	1999	Ext Cab	No	8.0 Box	6.8L V10	4800	6830	9900		B31219	-	---	---	---	950	---	---	---	---	---	---	---
F350 SUPER DUTY	4x4	1999	Ext Cab	Yes	8.0 Box	5.4L V8	5200	8250	11200		B31219	-	---	---	---	---	---	400	---	450	600	---	---
F350 SUPER DUTY	4x4	1999	Ext Cab	Yes	8.0 Box	5.4L V8	4800	8250	11200		B31219	-	---	---	---	---	---	700	---	---	---	---	---
F350 SUPER DUTY	4x4	1999	Ext Cab	Yes	8.0 Box	6.8L V10	5200	8250	11200		B31219	-	---	---	---	---	---	400	---	450	850	---	---
F350 SUPER DUTY	4x4	1999	Crew Cab	No	7.0 Box	5.4L V8	5200	6830	9900		B31219	-	---	---	---	550	550	550	---	600	---	---	---
F350 SUPER DUTY	4x4	1999	Crew Cab	No	7.0 Box	6.8L V10	5200	6830	9900		B31219	-	---	---	---	550	600	600	---	650	---	---	---
F350 SUPER DUTY	4x4	1999	Crew Cab	No	8.0 Box	5.4L V8	5200	6830	9900		B31219	-	---	---	---	500	500	500	---	600	---	---	---
F350 SUPER DUTY	4x4	1999	Crew Cab	No	8.0 Box	6.8L V10	5200	6830	9900		B31219	-	---	---	---	550	550	550	---	650	---	---	---

Notes:

1. Ballast amounts are based on a "Representative Vehicle," defined in the vehicle selection guide instructions, and must be modified for all other configurations for axle and GVWR compliance.
45. Ballast amounts for Model 760LT and 810PP are calculated on reduced plow weights produced after March 2006 (Serial Number 0603 or later). See the weight and dimensional charts at the end of this guide for reduced, current and old plow weights.

2005 to 1997 Ford

													LT			HD			SPEEDWING™		POWER PLOW™		
													680LT	720LT	760LT[45]	760 HD	800 HD	860 HD	760SW	860SW	810PP[45]	8611LP	8611PP
												Blade Width	6'-8"	7'-2"	7'-6"	7'-6"	8'-0"	8'-6"	7'-6"	8'-6"	8'-0" 10'-0"	8'-6" 11'-0"	8'-6" 11'-0"
												Blade Assembly	B0680	B0720	B0761	B0760	B0800	B0860	B0765	B0865	B0810	B0863	B0861
												Joystick Control	B62073								B62109		
												Touchpad Control	B62142								B62141		
Model		Year	Body Style	DRW	Box Option	Engine Type	Min FGAWR	Min RGAWR	Min GVWR	Headlight Conversion Harness	POWER HITCH™ System Under-carriage	POWER HITCH™ System Notes	Ballast Guidelines, lbs (1)										
F350 SUPER DUTY	4x4	1999	Crew Cab	Yes	7.0 Box	5.4L V8	5200	8250	11200	2B use B62220 or HB5 use B62222	B31219	-	---	---	---	---	---	450	---	500	---	---	---
F350 SUPER DUTY	4x4	1999	Crew Cab	Yes	7.0 Box	6.8L V10	5200	8250	11200		B31219	-	---	---	---	---	---	400	---	750	---	---	---
F350 SUPER DUTY	4x4	1999	Crew Cab	Yes	8.0 Box	5.4L V8	5200	8250	11200		B31219	-	---	---	---	---	---	350	---	450	---	---	---
F350 SUPER DUTY	4x4	1999	Crew Cab	Yes	8.0 Box	6.8L V10	5200	8250	11200		B31219	-	---	---	---	---	---	350	---	850	---	---	---
F350 SUPER DUTY	4x4	1999	All	No	Chassis	All	All	All	8501		B31219	-	---	---	---	?	?	?	---	?	?	?	---
F350 SUPER DUTY	4x4	1999	All	Yes	Chassis	All	All	All	8501		B31219	-	---	---	---	---	---	?	---	?	?	?	---
F350 SUPER DUTY	4x2	1999	Ext Cab	Yes	8.0 Box	5.4L V8	4400	8250	11200		B31219	-	---	---	---	---	---	950	---	---	---	---	---
F450 SUPER DUTY	4x4	1999	All	Yes	Chassis	All	All	All	8501		B31250	-	---	---	---	---	---	?	---	?	?	?	?
F450 SUPER DUTY	4x2	1999	All	Yes	Chassis	All	All	All	10001		B31250	-	---	---	---	---	---	?	---	?	?	?	?
F550 SUPER DUTY	4x4	1999	All	Yes	Chassis	All	All	All	8501		B31250	-	---	---	---	---	---	?	---	?	?	?	?
F550 SUPER DUTY	4x2	1999	All	Yes	Chassis	All	All	All	10001		B31250	-	---	---	---	---	---	?	---	?	?	?	?
RANGER	4x4	1998	Reg Cab	No	6.0 Box	3.0L V6	2640	2750	4960	HB5 use B62222	B31142	-	800	---	---	---	---	---	---	---	---	---	---
RANGER	4x4	1998	Reg Cab	No	7.0 Box	3.0L V6	2640	2750	4980		B31142	-	750	---	---	---	---	---	---	---	---	---	---
F150	4x4	1998	Reg Cab	No	8.0 Box	4.6L V8	3800	3200	6050		B31046	-	---	---	450	---	---	---	---	---	---	---	---
F150	4x4	1998	Reg Cab	No	8.0 Box	4.6L V8	3800	3200	6000		B31046	-	---	---	450	---	---	---	---	---	---	---	---
F250LD	4x4	1998	Reg Cab	No	8.0 Box	4.6L V8	4150	4800	7200		B31046	-	---	---	350	---	---	---	450	---	---	---	---
F250LD	4x4	1998	Reg Cab	No	8.0 Box	4.6L V8	4150	4300	7200		B31046	-	---	---	350	---	---	---	450	---	---	---	---
F250LD	4x4	1998	Reg Cab	No	8.0 Box	4.6L V8	3950	4800	7200		B31046	-	---	---	350	---	---	---	600	---	---	---	---
F250LD	4x4	1998	Reg Cab	No	8.0 Box	4.6L V8	3950	4300	7200		B31046	-	---	---	350	---	---	---	550	---	---	---	---
F250LD	4x4	1998	Reg Cab	No	8.0 Box	5.4L V8	4150	4800	7700		B31046	-	---	---	350	---	---	---	450	---	---	---	---
F250LD	4x4	1998	Reg Cab	No	8.0 Box	5.4L V8	4150	4300	7700		B31046	-	---	---	350	---	---	---	450	---	---	---	---
F250LD	4x4	1998	Reg Cab	No	8.0 Box	5.4L V8	3950	4800	7700		B31046	-	---	---	400	---	---	---	---	---	---	---	---
F250LD	4x4	1998	Reg Cab	No	8.0 Box	5.4L V8	3950	4300	7700		B31046	-	---	---	350	---	---	---	---	---	---	---	---
F250LD	4x4	1998	Ext Cab	No	6.5 Box	4.6L V8	3950	4800	7200		B31046	-	---	---	300	---	---	---	600	---	---	---	---
F250LD	4x4	1998	Ext Cab	No	6.5 Box	4.6L V8	3950	4300	7200		B31046	-	---	---	300	---	---	---	550	---	---	---	---
F250LD	4x4	1998	Ext Cab	No	6.5 Box	5.4L V8	3950	4800	7700		B31046	-	---	---	400	---	---	---	---	---	---	---	---
F250LD	4x4	1998	Ext Cab	No	6.5 Box	5.4L V8	3950	4300	7700		B31046	-	---	---	350	---	---	---	---	---	---	---	---

Notes:

1. Ballast amounts are based on a "Representative Vehicle," defined in the vehicle selection guide instructions, and must be modified for all other configurations for axle and GVWR compliance.
45. Ballast amounts for Model 760LT and 810PP are calculated on reduced plow weights produced after March 2006 (Serial Number 0603 or later). See the weight and dimensional charts at the end of this guide for reduced, current and old plow weights.

2005 to 1997 Ford

													LT			HD			SPEEDWING™		POWER PLOW™		
													680LT	720LT	760LT[45]	760 HD	800 HD	860 HD	760SW	860SW	810PP[45]	8611LP	8611PP
												Blade Width	6'-8"	7'-2"	7'-6"	7'-6"	8'-0"	8'-6"	7'-6"	8'-6"	8'-0" 10'-0"	8'-6" 11'-0"	8'-6" 11'-0"
												Blade Assembly	B0680	B0720	B0761	B0760	B0800	B0860	B0765	B0865	B0810	B0863	B0861
												Joystick Control	B62073								B62109		
												Touchpad Control	B62142								B62141		
Model		Year	Body Style	DRW	Box Option	Engine Type	Min FGAWR	Min RGAWR	Min GVWR	Headlight Conversion Harness	POWER HITCH™ System Under-carriage	POWER HITCH™ System Notes	Ballast Guidelines, lbs (1)										
RANGER	4x4	1997	Reg Cab	No	6.0 Box	3.0L V6	2640	2750	4960		B31142	-	800	---	---	---	---	---	---	---	---	---	---
RANGER	4x4	1997	Reg Cab	No	7.0 Box	3.0L V6	2640	2750	4980		B31142	-	750	---	---	---	---	---	---	---	---	---	---
F250LD	4x4	1997	Reg Cab	No	8.0 Box	4.6L V8	3950	4800	7200		B31046	-	---	---	350	---	---	---	600	---	---	---	---
F250LD	4x4	1997	Reg Cab	No	8.0 Box	4.6L V8	3950	4300	7200		B31046	-	---	---	350	---	---	---	550	---	---	---	---
F250LD	4x4	1997	Reg Cab	No	8.0 Box	5.4L V8	3950	4800	7700		B31046	-	---	---	400	---	---	---	---	---	---	---	---
F250LD	4x4	1997	Reg Cab	No	8.0 Box	5.4L V8	3950	4300	7700		B31046	-	---	---	350	---	---	---	---	---	---	---	---
F250LD	4x4	1997	Ext Cab	No	6.5 Box	4.6L V8	3950	4800	7200		B31046	-	---	---	300	---	---	---	600	---	---	---	---
F250LD	4x4	1997	Ext Cab	No	6.5 Box	4.6L V8	3950	4300	7200		B31046	-	---	---	300	---	---	---	550	---	---	---	---
F250LD	4x4	1997	Ext Cab	No	6.5 Box	5.4L V8	3950	4800	7700		B31046	-	---	---	400	---	---	---	---	---	---	---	---
F250LD	4x4	1997	Ext Cab	No	6.5 Box	5.4L V8	3950	4300	7700		B31046	-	---	---	350	---	---	---	---	---	---	---	---
F250HD	4x4	1997	Reg Cab	No	8.0 Box	5.8L V8	4600	6084	8600		B31036	-	---	---	---	250	300	300	---	350	500	900	---
F250HD	4x4	1997	Reg Cab	No	8.0 Box	7.3L D	4600	6084	8600		B31036	-	---	---	---	800	900	950	---	---	---	---	---
F250HD	4x4	1997	Reg Cab	No	8.0 Box	7.5L V8	4600	6084	8600	HB5 use B62222	B31036	-	---	---	---	350	400	400	---	450	850	---	---
F250HD	4x4	1997	Ext Cab	No	6.5 Box	7.5L V8	4600	6084	8800		B31036	-	---	---	---	400	400	400	---	500	---	---	---
F250HD	4x4	1997	Ext Cab	No	8.0 Box	5.8L V8	4600	6084	8800		B31036	-	---	---	---	250	250	250	---	350	700	---	---
F250HD	4x4	1997	Ext Cab	No	8.0 Box	7.5L V8	4600	6084	8800		B31036	-	---	---	---	350	350	350	---	450	---	---	---
F350	4x4	1997	Reg Cab	No	8.0 Box	5.8L V8	5000	6084	9000		B31036	-	---	---	---	350	400	400	---	450	600	750	---
F350	4x4	1997	Reg Cab	No	8.0 Box	5.8L V8	4600	6084	9000		B31036	-	---	---	---	350	400	400	---	450	600	---	---
F350	4x4	1997	Reg Cab	No	8.0 Box	7.3L D	5000	6084	9000		B31036	-	---	---	---	500	550	550	---	600	---	---	---
F350	4x4	1997	Reg Cab	No	8.0 Box	7.5L V8	5000	6084	9000		B31036	-	---	---	---	450	450	450	---	500	700	800	---
F350	4x4	1997	Reg Cab	No	8.0 Box	7.5L V8	4600	6084	9000		B31036	-	---	---	---	400	450	450	---	500	---	---	---
F350	4x4	1997	All	No	Chassis	All	All	All	8501		B31036	-	---	---	---	?	?	?	---	?	?	?	---
F350	4x4	1997	All	Yes	Chassis	All	All	All	8501		B31036	-	---	---	---	---	---	?	---	?	?	?	---
F350	4x2	1997	Reg Cab	Yes	8.0 Box	5.8L V8	4000	7100	10000		B31036	-	---	---	---	---	---	350	---	750	---	---	---
F350	4x2	1997	Reg Cab	Yes	8.0 Box	7.3L D	4400	7400	10000		B31036	-	---	---	---	---	---	850	---	---	---	---	---
F350	4x2	1997	Reg Cab	Yes	8.0 Box	7.5L V8	4000	7100	10000		B31036	-	---	---	---	---	---	1000	---	---	---	---	---

Notes:

1. Ballast amounts are based on a "Representative Vehicle," defined in the vehicle selection guide instructions, and must be modified for all other configurations for axle and GVWR compliance.

45. Ballast amounts for Model 760LT and 810PP are calculated on reduced plow weights produced after March 2006 (Serial Number 0603 or later). See the weight and dimensional charts at the end of this guide for reduced, current and old plow weights.

2005 to 1997 Freightliner

													LT			HD			SPEEDWING™		POWER PLOW™		
													680LT	720LT	760LT[45]	760 HD	800 HD	860 HD	760SW	860SW	810PP[45]	8611LP	8611PP
												Blade Width	6'-8"	7'-2"	7'-6"	7'-6"	8'-0"	8'-6"	7'-6"	8'-6"	8'-0" 10'-0"	8'-6" 11'-0"	8'-6" 11'-0"
												Blade Assembly	B0680	B0720	B0761	B0760	B0800	B0860	B0765	B0865	B0810	B0863	B0861
												Joystick Control	B62073								B62109		
												Touchpad Control	B62142								B62141		
Model		Year	Body Style	DRW	Box Option	Engine Type	Min FGAWR	Min RGAWR	Min GVWR	Headlight Conversion Harness	POWER HITCH™ System Under-carriage	POWER HITCH™ System Notes	Ballast Guidelines, lbs (1)										
FL 40/50	4x2	2003	All	No	All	All	All	All	10000	HB2 use B62220 or 1A/2A use B62227	B33038	-	---	---	---	---	---	---	---	---	---	---	?
FL 40/50	4x2	2002	All	No	All	All	All	All	10000		B33038	-	---	---	---	---	---	---	---	---	---	---	?
FL 40/50	4x2	2001	All	No	All	All	All	All	10000		B33038	-	---	---	---	---	---	---	---	---	---	---	?
FL 40/50	4x2	2000	All	No	All	All	All	All	10000		B33038	-	---	---	---	---	---	---	---	---	---	---	?
FL 40/50	4x2	1999	All	No	All	All	All	All	10000		B33038	-	---	---	---	---	---	---	---	---	---	---	?

Notes:

1. Ballast amounts are based on a “Representative Vehicle,” defined in the vehicle selection guide instructions, and must be modified for all other configurations for axle and GVWR compliance.
45. Ballast amounts for Model 760LT and 810PP are calculated on reduced plow weights produced after March 2006 (Serial Number 0603 or later). See the weight and dimensional charts at the end of this guide for reduced, current and old plow weights.

2005 to 1997 Jeep

													LT			HD			SPEEDWING™		POWER PLOW™		
													680LT	720LT	760LT[45]	760 HD	800 HD	860 HD	760SW	860SW	810PP[45]	8611LP	8611PP
												Blade Width	6'-8"	7'-2"	7'-6"	7'-6"	8'-0"	8'-6"	7'-6"	8'-6"	8'-0" 10'-0"	8'-6" 11'-0"	8'-6" 11'-0"
												Blade Assembly	B0680	B0720	B0761	B0760	B0800	B0860	B0765	B0865	B0810	B0863	B0861
												Joystick Control	B62073								B62109		
												Touchpad Control	B62142								B62141		
Model		Year	Body Style	DRW	Box Option	Engine Type	Min FGAWR	Min RGAWR	Min GVWR	Headlight Conversion Harness	POWER HITCH™ System Under-carriage	POWER HITCH™ System Notes	Ballast Guidelines, lbs (1)										
LIBERTY LIMITED	4x4	2005	SU-4DR	No	---	3.7L V6	2750	3150	5650	HB5 use B62222	B32207	-	0	0	---	---	---	---	---	---	---	---	---
LIBERTY SPORT	4x4	2005	SU-4DR	No	---	2.4L I4	2750	3150	5200		B32207	-	0	0	---	---	---	---	---	---	---	---	---
LIBERTY SPORT	4x4	2005	SU-4DR	No	---	3.7L V6	2750	3150	5200		B32207	-	0	0	---	---	---	---	---	---	---	---	---
LIBERTY RENEGADE	4x4	2005	SU-4DR	No	---	3.7L V6	2750	3150	5600		B32207	-	0	0	---	---	---	---	---	---	---	---	---
LIBERTY SPORT	4x4	2004	SU-4DR	No	---	2.4L I4	2750	3150	5600		B32207	-	0	0	---	---	---	---	---	---	---	---	---
LIBERTY SPORT	4x4	2003	SU-4DR	No	---	2.4L I4	2750	2950	5200	2D use B62220	B32207	-	0	0	---	---	---	---	---	---	---	---	---
LIBERTY SPORT	4x4	2003	SU-4DR	No	---	3.7L V6	2750	3150	5200		B32207	-	0	0	---	---	---	---	---	---	---	---	---
WRANGLER SAHARA	4x4	2003	SU-2DR	No	---	4.0L I6	2500	2600	4450		B32085	-	0	0	---	---	---	---	---	---	---	---	---
WRANGLER SE	4x4	2003	SU-2DR	No	---	2.5L I4	2500	2600	4450		B32085	-	0	0	---	---	---	---	---	---	---	---	---
WRANGLER SE	4x4	2003	SU-2DR	No	---	2.5L I4	2200	2600	4450		B32085	-	0	100	---	---	---	---	---	---	---	---	---
WRANGLER SPORT	4x4	2003	SU-2DR	No	---	4.0L I6	2500	2600	4450		B32085	-	0	0	---	---	---	---	---	---	---	---	---
WRANGLER X	4x4	2003	SU-2DR	No	---	4.0L I6	2500	2600	4450		B32085	-	0	0	---	---	---	---	---	---	---	---	---
WRANGLER SAHARA	4x4	2002	SU-2DR	No	---	4.0L I6	2500	2600	4450		B32085	-	0	0	---	---	---	---	---	---	---	---	---
WRANGLER SE	4x4	2002	SU-2DR	No	---	2.5L I4	2500	2600	4450		B32085	-	0	0	---	---	---	---	---	---	---	---	---
WRANGLER SE	4x4	2002	SU-2DR	No	---	2.5L I4	2200	2600	4450		B32085	-	0	100	---	---	---	---	---	---	---	---	---
WRANGLER SPORT	4x4	2002	SU-2DR	No	---	4.0L I6	2500	2600	4450		B32085	-	0	0	---	---	---	---	---	---	---	---	---
WRANGLER X	4x4	2002	SU-2DR	No	---	4.0L I6	2500	2600	4450		B32085	-	0	0	---	---	---	---	---	---	---	---	---
WRANGLER	4x4	2001	SU-2DR	No	---	2.5L I4	2500	2600	4360		B32085	-	0	0	---	---	---	---	---	---	---	---	---
WRANGLER	4x4	2000	SU-2DR	No	---	2.5L I4	2500	2600	4360		B32085	-	0	0	---	---	---	---	---	---	---	---	---
WRANGLER	4x4	1999	SU-2DR	No	---	2.5L I4	2500	2600	4360		B32085	-	0	0	---	---	---	---	---	---	---	---	---
WRANGLER	4x4	1998	SU-2DR	No	---	2.5L I4	2500	2600	4360		B32085	-	0	0	---	---	---	---	---	---	---	---	---
WRANGLER	4x4	1997	SU-2DR	No	---	2.5L I4	2500	2600	4360		B32085	-	0	0	---	---	---	---	---	---	---	---	---

Notes:

1. Ballast amounts are based on a "Representative Vehicle," defined in the vehicle selection guide instructions, and must be modified for all other configurations for axle and GVWR compliance.
45. Ballast amounts for Model 760LT and 810PP are calculated on reduced plow weights produced after March 2006 (Serial Number 0603 or later). See the weight and dimensional charts at the end of this guide for reduced, current and old plow weights.

2005 to 1997 Mazda

													LT			HD			SPEEDWING™		POWER PLOW™		
													680LT	720LT	760LT[45]	760 HD	800 HD	860 HD	760SW	860SW	810PP[45]	8611LP	8611PP
												Blade Width	6'-8"	7'-2"	7'-6"	7'-6"	8'-0"	8'-6"	7'-6"	8'-6"	8'-0" 10'-0"	8'-6" 11'-0"	8'-6" 11'-0"
												Blade Assembly	B0680	B0720	B0761	B0760	B0800	B0860	B0765	B0865	B0810	B0863	B0861
												Joystick Control	B62073								B62109		
												Touchpad Control	B62142								B62141		
Model		Year	Body Style	DRW	Box Option	Engine Type	Min FGAWR	Min RGAWR	Min GVWR	Headlight Conversion Harness	POWER HITCH™ System Under-carriage	POWER HITCH™ System Notes	Ballast Guidelines, lbs (1)										
B4000	4x4	2004	CabPlus	No	6.0 Box	4.0L V6	2850	2600	4960	HB5 use B62222	B31142	-	500	---	---	---	---	---	---	---	---	---	---
B4000	4x4	2004	CabPlus4	No	6.0 Box	4.0L V6	2850	2600	4960		B31142	-	500	---	---	---	---	---	---	---	---	---	---
B4000	4x4	2003	CabPlus	No	6.0 Box	4.0L V6	2850	2600	5100		B31142	-	300	300	---	---	---	---	---	---	---	---	---
B4000	4x4	2003	CabPlus	No	6.0 Box	4.0L V6	2710	2600	5100		B31142	-	600	700	---	---	---	---	---	---	---	---	---
B4000	4x4	2003	CabPlus4	No	6.0 Box	4.0L V6	2850	2600	5100		B31142	-	250	300	---	---	---	---	---	---	---	---	---
B4000	4x4	2003	CabPlus4	No	6.0 Box	4.0L V6	2710	2600	5100		B31142	-	750	---	---	---	---	---	---	---	---	---	---
B3000	4x4	2002	CabPlus	No	6.0 Box	3.0L V6	2850	2750	5080		B31142	-	250	250	---	---	---	---	---	---	---	---	---
B3000	4x4	2002	CabPlus	No	6.0 Box	3.0L V6	2710	2750	5080		B31142	-	700	800	---	---	---	---	---	---	---	---	---
B4000	4x4	2002	CabPlus4	No	6.0 Box	4.0L V6	2850	2750	5220		B31142	-	450	550	---	---	---	---	---	---	---	---	---
B3000	4x4	2001	Reg Cab	No	6.0 Box	3.0L V6	2800	2750	4700		B31142	-	250	250	---	---	---	---	---	---	---	---	---
B3000	4x4	2001	Reg Cab	No	6.0 Box	3.0L V6	2800	2600	4700		B31142	-	250	250	---	---	---	---	---	---	---	---	---
B3000	4x4	2001	Reg Cab	No	6.0 Box	3.0L V6	2710	2750	4700		B31142	-	400	500	---	---	---	---	---	---	---	---	---
B3000	4x4	2001	Reg Cab	No	6.0 Box	3.0L V6	2710	2600	4700		B31142	-	400	500	---	---	---	---	---	---	---	---	---
B3000	4x4	2001	CabPlus	No	6.0 Box	3.0L V6	2800	2750	5060		B31142	-	600	700	---	---	---	---	---	---	---	---	---
B3000	4x4	2001	CabPlus	No	6.0 Box	3.0L V6	2800	2600	5060		B31142	-	600	700	---	---	---	---	---	---	---	---	---
B3000	4x4	2000	CabPlus	No	6.0 Box	3.0L V6	2850	2750	5120		B31142	-	550	700	---	---	---	---	---	---	---	---	---
B3000	4x4	1999	Reg Cab	No	6.0 Box	3.0L V6	2710	2750	4980		B31142	-	650	---	---	---	---	---	---	---	---	---	---
B3000	4x4	1999	Reg Cab	No	6.0 Box	3.0L V6	2710	2600	4980		B31142	-	650	---	---	---	---	---	---	---	---	---	---
B3000	4x4	1999	CabPlus	No	6.0 Box	3.0L V6	2900	2750	5120		B31142	-	400	500	---	---	---	---	---	---	---	---	---
B3000	4x4	1999	CabPlus	No	6.0 Box	3.0L V6	2900	2750	5080		B31142	-	400	500	---	---	---	---	---	---	---	---	---
B3000	4x4	1999	CabPlus	No	6.0 Box	3.0L V6	2900	2600	5120		B31142	-	400	500	---	---	---	---	---	---	---	---	---
B3000	4x4	1999	CabPlus	No	6.0 Box	3.0L V6	2900	2600	5080		B31142	-	400	500	---	---	---	---	---	---	---	---	---

Notes:

1. Ballast amounts are based on a "Representative Vehicle," defined in the vehicle selection guide instructions, and must be modified for all other configurations for axle and GVWR compliance.
45. Ballast amounts for Model 760LT and 810PP are calculated on reduced plow weights produced after March 2006 (Serial Number 0603 or later). See the weight and dimensional charts at the end of this guide for reduced, current and old plow weights.

2005 to 1997 Nissan

													POWER HITCH										
													LT			HD			SPEEDWING™		POWER PLOW™		
													680LT	720LT	760LT[45]	760 HD	800 HD	860 HD	760SW	860SW	810PP[45]	8611LP	8611PP
												Blade Width	6'-8"	7'-2"	7'-6"	7'-6"	8'-0"	8'-6"	7'-6"	8'-6"	8'-0" 10'-0"	8'-6" 11'-0"	8'-6" 11'-0"
												Blade Assembly	B0680	B0720	B0761	B0760	B0800	B0860	B0765	B0865	B0810	B0863	B0861
												Joystick Control	B62073								B62109		
												Touchpad Control	B62142								B62141		
Model		Year	Body Style	DRW	Box Option	Engine Type	Min FGAWR	Min RGAWR	Min GVWR	Headlight Conversion Harness	POWER HITCH™ System Under-carriage	POWER HITCH™ System Notes	Ballast Guidelines, lbs (1)										
TITAN XE	4x4	2005	King Cab	No	6.5 Box	5.6L V8	3505	3805	6529	HB3/HB4 use B62224 & 29279	B35065	40	450	550	---	---	---	---	---	---	---	---	---
TITAN XE	4x4	2005	Crew Cab	No	6.5 Box	5.6L V8	3505	3805	6529		B35065	40	550	650	---	---	---	---	---	---	---	---	---
TITAN SE	4x4	2005	King Cab	No	6.5 Box	5.6L V8	3505	3805	6529		B35065	40	700	---	---	---	---	---	---	---	---	---	---
TITAN XE	4x4	2004	King Cab	No	6.5 Box	5.6L V8	3494	3793	6486		B35065	40	650	700	---	---	---	---	---	---	---	---	---
TITAN XE	4x4	2004	Crew Cab	No	6.5 Box	5.6L V8	3494	3793	6486		B35065	40	600	---	---	---	---	---	---	---	---	---	---

Notes:

1. Ballast amounts are based on a "Representative Vehicle," defined in the vehicle selection guide instructions, and must be modified for all other configurations for axle and GVWR compliance.
40. Removal of skid plate or splash guard required.
45. Ballast amounts for Model 760LT and 810PP are calculated on reduced plow weights produced after March 2006 (Serial Number 0603 or later). See the weight and dimensional charts at the end of this guide for reduced, current and old plow weights.

2005 to 1997 Toyota

													LT			HD			SPEEDWING™		POWER PLOW™		
													680LT	720LT	760LT[45]	760 HD	800 HD	860 HD	760SW	860SW	810PP[45]	8611LP	8611PP
												Blade Width	6'-8"	7'-2"	7'-6"	7'-6"	8'-0"	8'-6"	7'-6"	8'-6"	8'-0" 10'-0"	8'-6" 11'-0"	8'-6" 11'-0"
												Blade Assembly	B0680	B0720	B0761	B0760	B0800	B0860	B0765	B0865	B0810	B0863	B0861
												Joystick Control	B62073								B62109		
												Touchpad Control	B62142								B62141		
Model		Year	Body Style	DRW	Box Option	Engine Type	Min FGAWR	Min RGAWR	Min GVWR	Headlight Conversion Harness	POWER HITCH™ System Under-carriage	POWER HITCH™ System Notes	Ballast Guidelines, lbs (1)										
TACOMA	4x4	2005	Reg Cab	No	6.1 Box	2.7L I4	2755	3110	5100	HB2 use B62220	B35114	-	100	100	---	---	---	---	---	---	---	---	---
TUNDRA	4x4	2005	Reg Cab	No	8.0 Box	4.7L V8	3160	3760	6300		B35045	-	400	500	---	---	---	---	---	---	---	---	---
TUNDRA SR5	4x4	2005	Double Cab	No	6.2 Box	4.7L V8	3500	3760	6600		B35045	-	0	50	---	---	---	---	---	---	---	---	---
TUNDRA LIMITED	4x4	2005	Ext Cab	No	6.2 Box	4.7L V8	3160	3760	6300		B35045	-	800	---	---	---	---	---	---	---	---	---	---
TUNDRA LIMITED	4x4	2005	Double Cab	No	6.2 Box	4.7L V8	3500	3760	6600		B35045	-	100	150	---	---	---	---	---	---	---	---	---
TACOMA	4x4	2004	Reg Cab	No	8.0 Box	2.7L I4	2650	2800	5000		B35018	-	200	250	---	---	---	---	---	---	---	---	---
TACOMA	4x4	2004	Ext Cab	No	6.5 Box	2.7L I4	2650	2800	5000		B35018	-	600	700	---	---	---	---	---	---	---	---	---
TUNDRA	4x4	2004	Reg Cab	No	8.0 Box	4.7L V8	3160	3760	6300		B35045	-	400	500	---	---	---	---	---	---	---	---	---
TUNDRA	4x4	2004	Double Cab	No	6.2 Box	4.7L V8	3500	3760	6600		B35045	-	100	200	---	---	---	---	---	---	---	---	---
TUNDRA LIMITED	4x4	2004	Ext Cab	No	6.2 Box	4.7L V8	3160	3760	6300		B35045	-	800	---	---	---	---	---	---	---	---	---	---
TACOMA	4x4	2003	Reg Cab	No	8.0 Box	2.7L I4	2650	2800	5000		B35018	-	200	200	---	---	---	---	---	---	---	---	---
TACOMA	4x4	2003	Ext Cab	No	6.5 Box	2.7L I4	2650	2800	5000		B35018	-	300	400	---	---	---	---	---	---	---	---	---
TACOMA	4x4	2003	Ext Cab	No	6.5 Box	3.4L V6	2650	2800	5100		B35018	-	600	700	---	---	---	---	---	---	---	---	---
TUNDRA	4x4	2003	Reg Cab	No	8.0 Box	4.7L V8	3160	3760	6200		B35045	-	900	1000	---	---	---	---	---	---	---	---	---
TACOMA	4x4	2002	Reg Cab	No	8.0 Box	2.7L I4	2650	2800	5000		B35018	-	200	200	---	---	---	---	---	---	---	---	---
TACOMA	4x4	2002	Ext Cab	No	6.5 Box	2.7L I4	2650	2800	5000		B35018	-	300	400	---	---	---	---	---	---	---	---	---
TACOMA	4x4	2002	Ext Cab	No	6.5 Box	3.4L V6	2650	2800	5100		B35018	-	600	700	---	---	---	---	---	---	---	---	---
TUNDRA	4x4	2002	Reg Cab	No	8.0 Box	4.7L V8	3160	3760	6200		B35045	-	900	1000	---	---	---	---	---	---	---	---	---

Notes:

1. Ballast amounts are based on a "Representative Vehicle," defined in the vehicle selection guide instructions, and must be modified for all other configurations for axle and GVWR compliance.
45. Ballast amounts for Model 760LT and 810PP are calculated on reduced plow weights produced after March 2006 (Serial Number 0603 or later). See the weight and dimensional charts at the end of this guide for reduced, current and old plow weights.

2005 to 1997 Toyota

													LT			HD			SPEEDWING™		POWER PLOW™		
													680LT	720LT	760LT[45]	760 HD	800 HD	860 HD	760SW	860SW	810PP[45]	8611LP	8611PP
												Blade Width	6'-8"	7'-2"	7'-6"	7'-6"	8'-0"	8'-6"	7'-6"	8'-6"	8'-0" 10'-0"	8'-6" 11'-0"	8'-6" 11'-0"
												Blade Assembly	B0680	B0720	B0761	B0760	B0800	B0860	B0765	B0865	B0810	B0863	B0861
												Joystick Control	B62073								B62109		
												Touchpad Control	B62142								B62141		
Model		Year	Body Style	DRW	Box Option	Engine Type	Min FGAWR	Min RGAWR	Min GVWR	Headlight Conversion Harness	POWER HITCH™ System Under-carriage	POWER HITCH™ System Notes	Ballast Guidelines, lbs (1)										
TACOMA	4x4	2001	Reg Cab	No	8.0 Box	2.7L I4	2650	2800	5000	HB2 use B62220	B35018	-	200	200	---	---	---	---	---	---	---	---	---
TACOMA	4x4	2001	Ext Cab	No	6.5 Box	2.7L I4	2650	2800	5000		B35018	-	300	400	---	---	---	---	---	---	---	---	---
TACOMA	4x4	2001	Ext Cab	No	6.5 Box	3.4L V6	2650	2800	5100		B35018	-	600	700	---	---	---	---	---	---	---	---	---
TUNDRA	4x4	2001	Reg Cab	No	8.0 Box	4.7L V8	3160	3760	6200		B35045	-	900	1000	---	---	---	---	---	---	---	---	---
TACOMA	4x4	2000	Reg Cab	No	8.0 Box	2.7L I4	2650	2800	5000		B35018	-	200	200	---	---	---	---	---	---	---	---	---
TACOMA	4x4	2000	Ext Cab	No	6.5 Box	2.7L I4	2650	2800	5000		B35018	-	300	400	---	---	---	---	---	---	---	---	---
TACOMA	4x4	2000	Ext Cab	No	6.5 Box	3.4L V6	2650	2800	5100		B35018	-	600	700	---	---	---	---	---	---	---	---	---
TUNDRA	4x4	2000	Reg Cab	No	8.0 Box	4.7L V8	3160	3760	6200		B35045	-	900	1000	---	---	---	---	---	---	---	---	---
TACOMA	4x4	1999	Reg Cab	No	8.0 Box	2.7L I4	2650	2800	5000		B35018	-	200	200	---	---	---	---	---	---	---	---	---
TACOMA	4x4	1999	Ext Cab	No	6.5 Box	2.7L I4	2650	2800	5000		B35018	-	300	400	---	---	---	---	---	---	---	---	---
TACOMA	4x4	1999	Ext Cab	No	6.5 Box	3.4L V6	2650	2800	5100		B35018	-	600	700	---	---	---	---	---	---	---	---	---
TACOMA	4x4	1998	Reg Cab	No	8.0 Box	2.7L I4	2650	2800	5000		B35018	-	200	200	---	---	---	---	---	---	---	---	---
TACOMA	4x4	1998	Ext Cab	No	6.5 Box	2.7L I4	2650	2800	5000		B35018	-	300	400	---	---	---	---	---	---	---	---	---
TACOMA	4x4	1998	Ext Cab	No	6.5 Box	3.4L V6	2650	2800	5100		B35018	-	600	700	---	---	---	---	---	---	---	---	---
TACOMA	4x4	1997	Reg Cab	No	8.0 Box	2.7L I4	2650	2800	5000		B35018	-	200	200	---	---	---	---	---	---	---	---	---
TACOMA	4x4	1997	Ext Cab	No	6.5 Box	2.7L I4	2650	2800	5000		B35018	-	300	400	---	---	---	---	---	---	---	---	---
TACOMA	4x4	1997	Ext Cab	No	6.5 Box	3.4L V6	2650	2800	5100		B35018	-	600	700	---	---	---	---	---	---	---	---	---

Notes:

1. Ballast amounts are based on a "Representative Vehicle," defined in the vehicle selection guide instructions, and must be modified for all other configurations for axle and GVWR compliance.
45. Ballast amounts for Model 760LT and 810PP are calculated on reduced plow weights produced after March 2006 (Serial Number 0603 or later). See the weight and dimensional charts at the end of this guide for reduced, current and old plow weights.

HEADLAMP REFERENCE GUIDE

NOTE: The lamp type is usually embossed in the headlamp lens.

NOTE: Blue ground wires may be LT or DK BLU, w/ or w/o WHT stripe, depending on harness.

Headlamp Type	Bulb Type	Headlamp Type	Bulb Type
LF	H4703	2E1	H6545
UF	H4701	H13	9008
1A1	H4651	HB1	9004
2A1	H4652(GMC/Chevy)	HB2	9003
2A1	H4656 (Mitsubishi)	HB3	9005
2B1	H6054	HB4	9006
2D1	H6024	HB5	9007

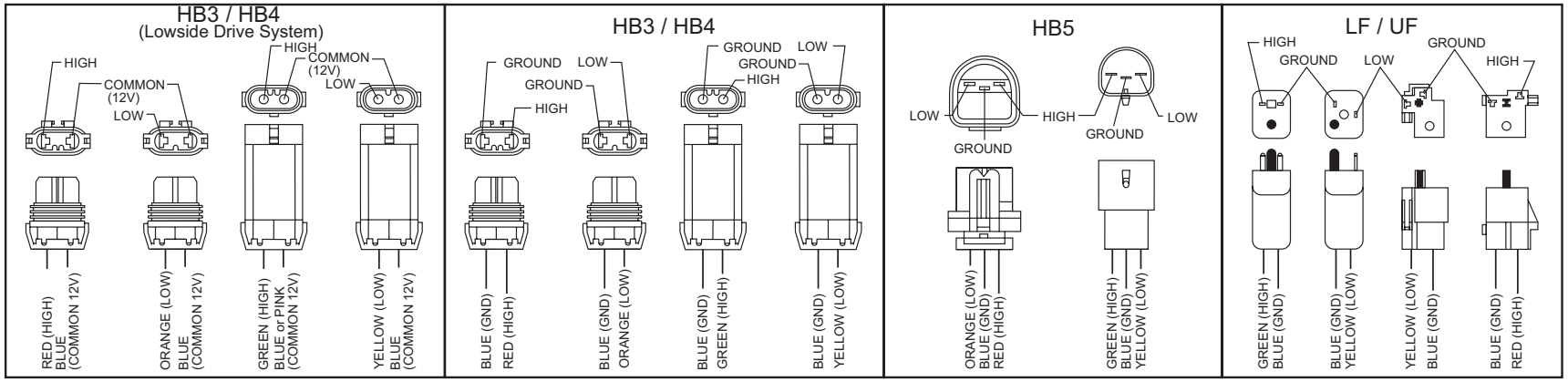

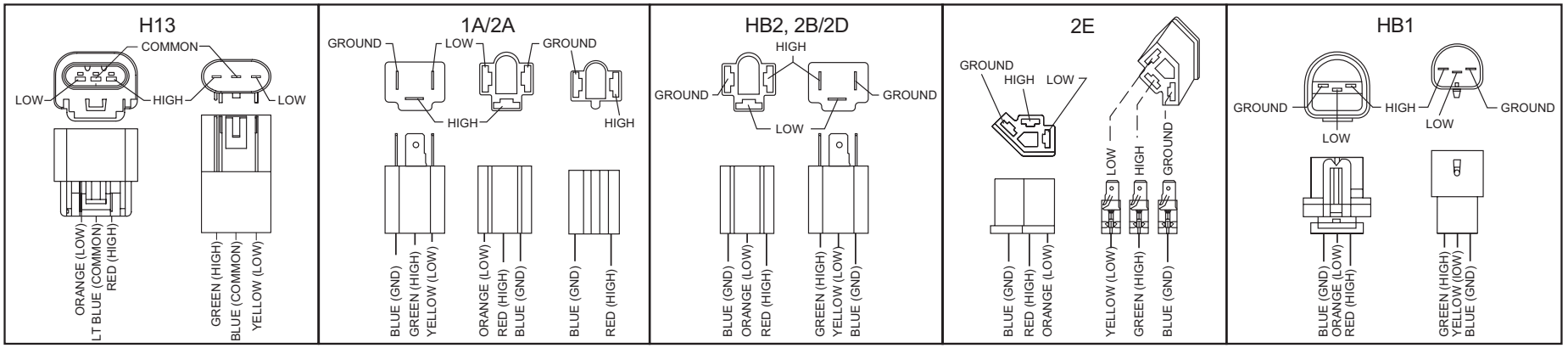

WEIGHT AND DIMENSIONAL CHARTS

Snowplows and Accessories Information					
Snowplows		Accessories – Part Number (Actual Weight in lb)			Variable
Model	Weight (lb)	Snow Deflectors	Airfoils	POLAR EDGE® Polyurethane Cutting Edges w/Hardware	Z (in)
680LT	334	–	–	–	18.0
720LT	348	–	–	–	19.0
760LT[1]	563	B61243 (21.3)	B81041 (9.3)	B61544 (52.3)	24.5
760LT[2]	540	B61243 (21.3)	B81041 (9.3)	B61544 (52.3)	24.5
760HD	717	B61242 (22.3)	B52093 (13.3)	B61544 (52.3)	26.3
800HD	734	B61260 (23.3)	B52093 (13.3)	B61543 (55.3)	26.8
860HD	743	B61545 (27.3)	B52093 (13.3)	B61542 (59.3)	26.8
760SW	642	–	–	–	25.7
860SW	812	–	–	–	27.4
810PP[1]	1012	B61241 (38.3)	B52093 (13.3)	B61536 (99.6)	29.5
810PP[2]	964	B61241 (38.3)	B52093 (13.3)	B61536 (99.6)	29.5
8611LP	1083	B52087 (41.3)	B52092 (14.3)	–	29.7
8611PP	1422	B52087 (41.3)	B52092 (14.3)	B61541 (141.1)	33.6

1. manufacture date before March 2006 2. manufacture date on or after March 2006

Undercarriage (U/C) Information*							
U/C #	Weight (lb)	X (in)	Y (in)	U/C #	Weight (lb)	X (in)	Y (in)
B30042	107.0	33.9	3.0	B32013	137.0	33.5	3.5
B30043	83.0	31.6	3.1	B32034	136.0	33.5	3.5
B30055	104.0	36.2	4.9	B32037	56.0	34.3	7.3
B30071	110.0	36.2	4.9	B32048	125.0	36.4	3.9
B30080	113.0	31.6	3.1	B32057	139.0	36.2	4.9
B30087	111.0	35.2	3.8	B32085	83.0	24.4	0.3
B30089	94.0	36.2	4.9	B32157	85.0	36.2	4.9
B30172	209.0	24.4	0.3	B32188	83.0	36.2	4.9
B30174	79.0	34.7	7.7	B32207	64.0	24.4	0.3
B30185	61.0	33.2	1.6	B32214	68.0	34.3	7.3
B30186	84.0	34.8	4.3	B32221	80.0	34.8	4.3
B30191	192.0	33.9	3.0	B33010	147.0	34.1	6.0
B31036	92.0	34.8	4.3	B33038	236.0	33.5	3.5
B31041	106.0	34.8	4.3	B35018	78.0	31.6	3.1
B31046	79.0	34.7	7.7	B35028	68.0	31.6	3.1
B31056	66.0	31.9	1.2	B35037	50.0	33.9	3.0
B31074	82.0	34.8	4.3	B35045	71.0	34.8	4.3
B31085	83.0	35.2	3.8	B35062	35.0	15.0	5.0
B31142	92.0	31.9	1.2	B35065	69.0	34.8	4.3
B31184	114.0	34.8	4.3	B35101	39.0	**	**
B31219	175.0	34.1	6.0	B35114	78.0	31.6	3.1
B31250	175.0	34.1	6.0				

* These weights include the weight of the light tower when applicable.
** Information to be provided in a future revision of this guide.

NOTE: The addition of accessories to a snowplow or vehicle will require additional ballast above any amount published in this guide in order to maintain FMVSS compliance. Completed vehicle with additional accessories shall not exceed GVWR or GAWR.

NOTE: An abbreviation key is on page 2.

NOTE: See next page for variable definitions.

POLAR EDGE® is a registered (®) trademark of Superior Tire and Rubber Corp.

DIMENSIONAL DIAGRAM

Variables:

X = Distance from center of front axle to hitch pin

Y = Distance from hitch pin to CG of undercarriage.

Z = Distance from hitch pin to CG of snowplow.

Available vehicle capacities for aftermarket equipment and components can be determined by using the above information along with information provided by the vehicle manufacturer's Body Builder Guides. Follow all requirements and recommendations as stated by vehicle manufacturer.

NOTE: An abbreviation key is on page 2.

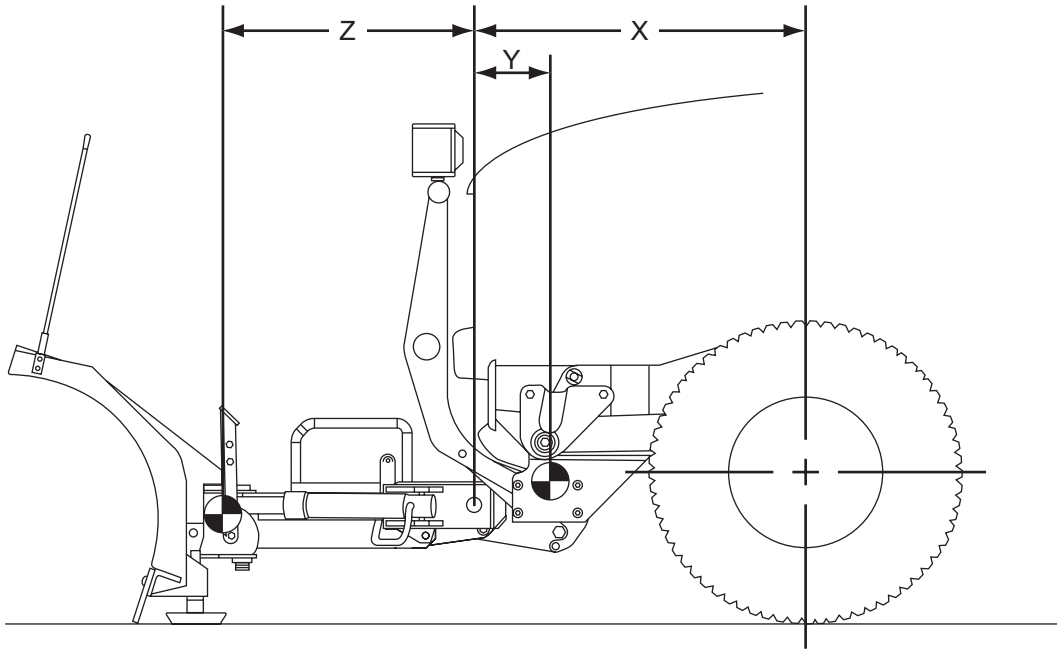

VEHICLE AND PLOW APPLICATION INQUIRY SHEET

BLIZZARD® SNOWPLOWS

Blizzard
P.O. Box 245038
Milwaukee, WI 53224-9538

Telephone (888) 860-8600
Fax (877) 254-9329

DISTRIBUTOR	TEL
	FAX

CUSTOMER	
VIN	DATE BUILT

VEHICLE INFORMATION

YEAR				
MAKE				
MODEL				
DRIVE TRAIN	☐ 4x2 (over 10,000 lb. GVW only)	☐ 4x4	☐ ALL WHEEL	☐ OTHER
DRW (Dual Rear Wheels)	☐ YES	☐ NO		
BODY STYLE	☐ REG CAB	☐ EXT CAB	☐ OTHER	
BOX OPTION (S)	☐ DUMP BOX	☐ STAKE BED	☐ OTHER	
ENGINE TYPE				
GFAWR				
GRAWR				
GVWR				

HORIZONTAL DISTANCE DESCRIPTION

L31	DRIVERS hip point; in MIDDLE position, to Centerline of FRONT axle	(in.)
L101	Between axles (Wheelbase)	(in.)
L104	Middle of FRONT bumper to centerline of FRONT axle	(in.)
	Middle of ballast location to centerline of REAR axle	(in.)

VEHICLE WEIGHT (TRUCK MUST BE WEIGHED COMPLETE AND EMPTY (-) OCCUPANTS, PLOW & UNDERCARRIAGE)

FRONT (lb.)	REAR (lb.)

FUEL TANKS (ONLY NEEDED IF WEIGHED VEHICLE NOT FULLY FUELED)

	LEVEL (see below)	CAPACITY (gal.)	LOCATION FROM AXLE TO CENTER OF TANK(in.)
FRONT OF AXLE			
REAR OF AXLE			

FUEL LEVEL (EMPTY = 0, HALF = 1/2, FULL = 1)

THIS FORM *MUST* BE COMPLETED IN ITS ENTIRETY. ANY FORMS CONTAINING INCOMPLETE INFORMATION *WILL NOT BE CONSIDERED*. PLEASE RETURN VIA FAX (877) 254-9329.

Blizzard and the vehicle manufacturer may require or recommend optional equipment for snow removal.
See the BLIZZARD® *Undercarriage Selection Guide* for additional product information.

August 20, 2006

Lit. No. 29321, Rev. 01

UTILITY VEHICLE U/C KITS

⚠ WARNING

Do not exceed vehicle operative capacity including the blade. See vehicle rating label.

NOTE: The vehicle manufacturer may require or recommend optional equipment or modifications for snowplow installations.

BLIZZARD® undercarriage kits are also available for your Kubota RTV900 4X4 or Bobcat 2200. These custom-fit kits allow you to plow snow with your utility vehicle using either a 680LT or 720LT BLIZZARD straight blade snowplow—the same snowplows that are available for your light truck or SUV.

Both snowplow models include hydraulic lifting and angling functions, in-cab controls and the POWER HITCH™ attachment system. As with all BLIZZARD snowplows, a complete line of accessories and replacement parts is also available for these models.

A BLIZZARD snowplow on a utility vehicle is ideal for both residential and commercial applications, including sidewalks.

To order a complete snowplow package, order a blade assembly, control and undercarriage kit:

- B0680 (6'-8" blade) *or* B0720 (7'-2" blade)
- B62073 (joystick) *or* B62142 (touchpad)
- B35062 *or* B35101 (undercarriage kit, see right)

See your sales outlet for more information.

2004–__ Kubota RTV900 4X4
U/C Kit #B35062

2005 Bobcat 2200
U/C Kit #B35101

Notes:

Blizzard
P.O. Box 245038
Milwaukee, WI 53224-9538
www.blizzardplows.com

A DIVISION OF DOUGLAS DYNAMICS, L.L.C.

Blizzard reserves the right under its product improvement policy to change construction or design details and furnish equipment when so altered without reference to illustrations or specifications used. Blizzard or the vehicle manufacturer may require or recommend optional equipment for snow removal. Do not exceed vehicle ratings with a snowplow. Blizzard offers a limited warranty for all snowplows and accessories. See separately printed page for this important information. The following are registered (®) or unregistered (™) trademarks of Douglas Dynamics, L.L.C.: BLIZZARD®, BLIZZARD POWER PLOW®, POWER PLOW™, POWER HITCH™, SPEEDWING™.

Printed in U.S.A.